1

Uninterruptible Power Supplies

CONTENTS

1.1 Classification 3
1.1.1 Static UPS 3
1.1.1.1 On-Line UPS 4
1.1.1.1.1 Normal Mode of Operation 4
1.1.1.1.2 Stored-Energy Mode of Operation 5
1.1.1.1.3 Bypass Mode of Operation 5
1.1.1.2 Off-Line UPS 6
1.1.1.2.1 Normal Mode of Operation 7
1.1.1.2.2 Stored-Energy Mode of Operation 7
1.1.1.3 Line-Interactive UPS 8
1.1.1.3.1 Normal Mode of Operation 10
1.1.1.3.2 Stored-Energy Mode of Operation 11
1.1.2 Rotary UPS 12
1.1.3 Hybrid Static/Rotary UPS 13
1.2 Batteries for UPS Applications 14
1.2.1 History 14
1.2.2 Valve-Regulated Lead–Acid Batteries 14
1.2.3 UPS Battery Features 15
1.2.4 Problems 15
1.2.5 Charging Strategies 17
1.2.6 Failure Category 18
1.2.7 Monitoring 18
1.3 Flywheels for UPS Applications 19
1.3.1 Fundamentals 19
1.3.2 Classification 22
1.3.2.1 Low-Speed Flywheel Systems 22
1.3.2.2 High-Speed Flywheel Systems 22
1.3.3 UPS Applications of Flywheels 23
1.4 Comparative Analysis of Flywheels and Electrochemical Batteries 26

© 2005 by CRC Press LLC

1.5 Applications of UPS Systems 27
1.5.1 Distributed Approach 28
1.5.2 Centralized Approach 29
1.6 Parallel Operation 30
1.6.1 Configurations 31
1.6.2 Fundamental Principles of Parallel Operation 35
1.6.3 Control Strategies in UPS Parallel Operation 36
1.6.3.1 Concentrated Control 36
1.6.3.2 Master–Slave Control 36
1.6.3.3 Distributed Control 37
1.6.3.4 Wireless Independent Control 37
1.7 Performance Evaluation of UPS Systems 38
1.8 Power Factor Correction in UPS Systems 39
1.8.1 Passive PFC Techniques 40
1.8.2 Active PFC Techniques 40
1.9 Control of UPS Systems 43
1.9.1 Single-Voltage Control Loop Strategy 43
1.9.2 Multiple Control Loops 44
1.9.2.1 Hysteresis Current Control 45
1.9.2.2 SPWM Current Control 45
1.9.2.3 Predictive Current Control 46
1.10 Converters for UPS Systems 46
1.10.1 Rectifiers 47
1.10.1.1 Uncontrolled Rectifiers 47
1.10.1.2 Controlled Rectifiers 48
1.10.2 Inverters 52
1.10.2.1 Basic Principles of Operation 52
1.10.2.2 Pulse Width-Modulated Switching Scheme 53
1.11 Battery Charger/Discharger 56
References 58

Uninterruptible power supply (UPS) systems provide uninterrupted, reliable, and high-quality power for vital loads. They, in fact, protect sensitive loads against power outages as well as overvoltage and undervoltage conditions. UPS systems also suppress line transients and harmonic disturbances. Applications of UPS systems include medical facilities, life-support systems, data storage and computer systems, emergency equipment, telecommunications, industrial processing, and on-line management systems.

Generally, an ideal UPS should be able to deliver uninterrupted power while simultaneously providing the necessary power conditioning for the particular power application. Therefore, an ideal UPS should have the following features [1]:

© 2005 by CRC Press LLC

- Regulated sinusoidal output voltage with low total harmonic distortion (THD) independent of the changes in the input voltage or in the load, linear or nonlinear, balanced or unbalanced.
- On-line operation, which means zero switching time from normal to backup mode and vice versa.
- Low THD sinusoidal input current and unity power factor.
- High reliability.
- Bypass as a redundant source of power in the case of internal failure.
- High efficiency.
- Low electromagnetic interference (EMI) and acoustic noise.
- Electric isolation of the battery, output, and input.
- Low maintenance.
- Low cost, weight, and size.

The advances in power electronics during the past three decades have resulted in a great variety of new topologies and control strategies for UPS systems. The research has been focused mainly on improving performance and expanding application areas of UPS systems. The issue of reducing the cost of converters has recently attracted the attention of researchers [2–15]. Reducing the number of switches provides the most significant cost reduction. Another form of cost reduction is to replace active switches such as IGBTs, MOSFETs, and thyristors with diodes. Not only are diodes more reasonable than the controlled switches, but there is also a cost reduction from eliminating gate drivers for active switches and power supplies for gate drivers.

Another way of reducing cost is to develop topologies that employ switches with lower reverse voltage stresses and lower current ratings, which means less silicon and smaller switching losses resulting in lower cost and higher efficiency.

1.1 Classification

UPS systems are classified into three general types: static, rotary, and hybrid static/rotary. In this section, we explain these three categories of the UPS systems.

1.1.1 Static UPS

Static UPS systems are the most commonly used UPS systems. They have a broad variety of applications from low-power personal computers and telecommunication systems, to medium-power medical systems, and to high-power utility systems. Their main advantages are high efficiency, high

© 2005 by CRC Press LLC

reliability, and low THD. The inherent problems related to static UPS systems are poor performance with nonlinear and unbalanced loads and high cost for achieving very high reliability. On-line, off-line, and line-interactive configurations are the main types of the static UPS systems [2, 14, 15].

1.1.1.1 On-Line UPS

On-line UPS systems appeared during the 1970s [14]. They consist of a rectifier/charger, a battery set, an inverter, and a static switch (bypass). Other names for this configuration are inverter-preferred UPS and double-conversion UPS [14, 15]. Figure 1.1 shows the block diagram of a typical on-line UPS. The rectifier/charger continuously supplies the DC bus with power. Its power rating is required to meet 100% of the power demanded by the load as well as the power demanded for charging the battery bank. The batteries are usually sealed lead–acid type. They are rated in order to supply power during the backup time, when the AC line is not available. The duration of this time varies in different applications. The inverter is rated at 100% of the load power since it must supply the load during the normal mode of operation as well as during the backup time. It is always on; hence, there is no transfer time associated with the transition from normal mode to stored energy mode. This is the main advantage of the on-line UPS systems. The static switch provides redundancy of the power source in the case of UPS malfunction or overloading. The AC line and load voltage must be in phase in order to use the static switch. This can be achieved easily by locked-phase control loop.

There are three operating modes related to this topology: normal mode, stored energy mode, and bypass mode.

1.1.1.1.1 Normal Mode of Operation

During this mode of operation, the power to the load is continuously supplied via the rectifier/charger and inverter. In fact, a double conversion, that is, AC/DC and DC/AC, takes place. It allows very good line conditioning. The AC/DC converter charges the battery set and supplies power to the load via the inverter. Therefore, it has the highest power rating in this topology, increasing the cost.

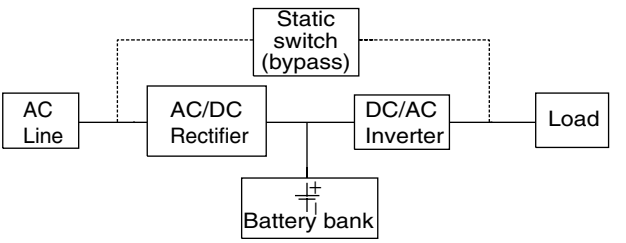

FIGURE 1.1
Block diagram of a typical on-line UPS system.

© 2005 by CRC Press LLC

1.1.1.1.2 Stored-Energy Mode of Operation

When the AC input voltage is outside the preset tolerance, the inverter and battery maintain continuity of power to the load. The duration of this mode is the duration of the preset UPS backup time or until the AC line returns within the preset tolerance. When the AC line returns, a phase-locked loop (PLL) makes the load voltage in phase with the input voltage and after that the UPS system returns to the normal operating mode.

1.1.1.1.3 Bypass Mode of Operation

The UPS operates in this mode in case of an internal malfunction such as overcurrent. This mode is also used for fault clearing. It should be mentioned that the output frequency should be the same as the AC line frequency in order to ensure the transfer of power. In some cases, there can be a maintenance bypass as well. A manual switch usually operates it.

The main advantages of on-line UPS are very wide tolerance to the input voltage variation and very precise regulation of output voltage. In addition, there is no transfer time during the transition from normal to stored energy mode. It is also possible to regulate or change the output frequency [14].

The main disadvantages of this topology are low-power factor, high THD at the input, and low efficiency. The input current is distorted by the rectifier unless an extra power factor correction (PFC) circuit is added; but, this adds to the cost of the UPS system [2]. Because of this inherently low input power factor, the on-line UPS cannot efficiently utilize the utility network and local installation. The low efficiency is inherent to this topology because of the double-conversion nature of this UPS. Power flow through the rectifier and inverter during the normal operation means higher power losses and lower efficiency compared to off-line and line-interactive UPS systems.

Despite the disadvantages, double-conversion UPS is the most preferred topology in performance, power conditioning, and load protection. This is the reason why they have a very broad range of applications from a few kVA to several MVA. This broad range of applications brings a large diversity of topologies in on-line UPS systems [3]. Each topology tries to solve different specific problems and the particular choice depends upon the particular application. However, generally, there are two major types of double-conversion topologies: with a low-frequency transformer isolation and with a high-frequency transformer isolation. Figure 1.2 shows the block diagram of an on-line UPS with a low-frequency transformer isolation at the output.

In this configuration, there is an isolating transformer at the output, which operates at low frequency. This, of course, means a larger transformer. Therefore, this topology is used only in high-power ratings (>20 kVA), where the switching frequency is limited to less than 2 kHz. Apart from the large size of the isolating transformer, the drawback of this topology is high acoustic noise from the transformer as well as the reactor of the output filter [3]. This topology also has a poor transient response to the changes in the load and input voltage.

© 2005 by CRC Press LLC

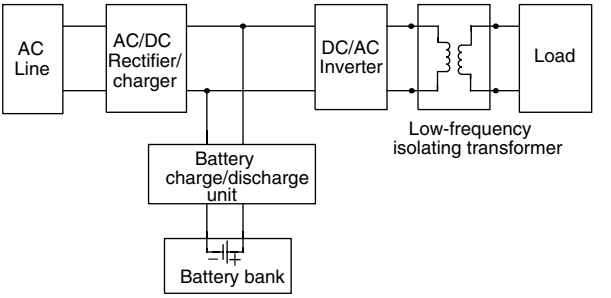

FIGURE 1.2
Block diagram of an on-line UPS with a low-frequency transformer isolation at the output.

By increasing the switching frequency of the inverter above 20 kHz, these problems are solved, except for the size of the isolating transformer, since it is independent of the switching frequency. A topology employing a high-frequency transformer link can significantly reduce the weight and the size of the transformer [3, 16]. The use of high-frequency pulse width modulation (PWM) techniques can additionally reduce the size of the output filter. Figure 1.3 shows the block diagram of an on-line UPS with a high-frequency transformer isolation between the input and the output.

In contrast with the on-line UPS, which drives the load in the normal operating mode, off-line UPS provides power for the load in case of power outage, overvoltage, and undervoltage situations in the AC line.

1.1.1.2 Off-Line UPS

This configuration is also known as the standby UPS or line-preferred UPS [14, 15]. As shown in Figure 1.4, it consists of an AC/DC converter, a battery bank, a DC/AC inverter, and a static switch. A filter may be used at the output of the UPS or inverter to improve the quality of the output voltage. The static switch is on during the normal mode of operation when the AC line is alive. Therefore,

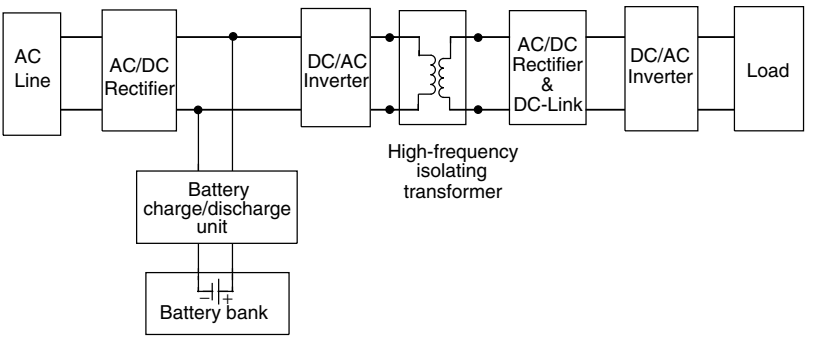

FIGURE 1.3
Block diagram of an on-line UPS with high-frequency transformer isolation.

© 2005 by CRC Press LLC

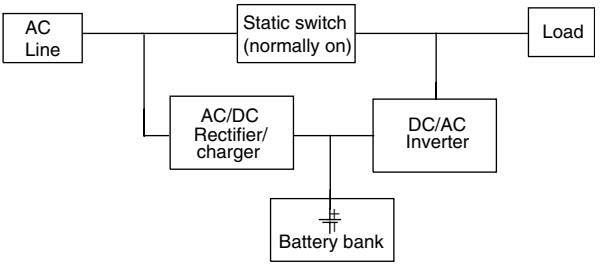

FIGURE 1.4
Block diagram of a typical off-line UPS system.

the load is supplied with power from the AC line directly without any power conditioning. The AC/DC converter charges the battery set. It is rated at a much lower power rating than the rectifier/charger in an on-line UPS since it is not required to meet the power demand of the load. This, in turn, makes the off-line UPS systems more reasonable than the on-line UPS systems. The inverter is rated at 100% of the load's demand. It is connected in parallel to the load and stays standby during the normal mode of operation. It is turned on only when the primary power is out of a given preset tolerance or is not available at all. During this mode of operation, the power to the load is supplied by the battery set via the inverter for the duration of the preset backup time or until the AC line is back again. The duration of the switching time depends on the starting time of the inverter. The transfer time is usually about ¼ line cycle, which is enough for most of the applications such as personal computers.

The DC/AC inverter is conventionally off in this mode. Therefore, an off-line UPS is not usually correcting the power factor. However, in the normal mode of operation, the DC/AC inverter may be used as an active filter to reduce the harmonic content of the line current or improve the power factor of the load. Further modification can also be made to reduce the harmonic content of the sinking current by the AC/DC converter when charging the battery. Yet, these increase the complexity of the system.

There are two operating modes for an off-line UPS system: normal mode and stored-energy mode.

1.1.1.2.1 Normal Mode of Operation

In this mode, the AC line supplies the load via filter/conditioner, which, in fact, is not always required, but often exists. The filter/conditioner depends on the requirements of the particular load and the quality of the AC line power supply. The AC/DC converter charges the battery in this mode in order to provide backup power for the stored-energy mode of operation.

1.1.1.2.2 Stored-Energy Mode of Operation

When the AC line is beyond the preset tolerance or is not available, the load is supplied by the battery set through the inverter for the backup time or until the AC line is available again. The rating of the AC/DC converter has to

© 2005 by CRC Press LLC

meet only the charging requirements of the battery, which contributes to the lower cost of this UPS.

The main advantages of this topology are a simple design, low cost, and small size. The line conditioning, when there is such a feature, is passive and the technique is very robust. On the other hand, lack of real isolation of the load from the AC line, no output voltage regulation, long switching time, and poor performance with nonlinear loads are the main disadvantages.

The use of a three-winding transformer, as shown in Figure 1.5, can provide electric isolation for the off-line UPS. This technique has a high reliability at a moderate cost. The transformer allows limited power conditioning for the output voltage as well. The use of a Ferro-resonant transformer leads to a heavier UPS with a lower efficiency [15]. The disadvantages of off-line UPS systems limit their application to less than 2 kVA [3, 14, 15].

1.1.1.3 Line-Interactive UPS

In the 1990s, line-interactive UPS systems were presented [14]. As shown in Figure 1.6, a line-interactive UPS system consists of a static switch, a series inductor, a bidirectional converter, and a battery set.

A line-interactive UPS system can operate either as an on-line UPS or as an off-line UPS. For an off-line line-interactive UPS, the series inductor is not required. However, most of the line-interactive UPS systems operate on-line in order to either improve the power factor of the load or regulate the output voltage for the load.

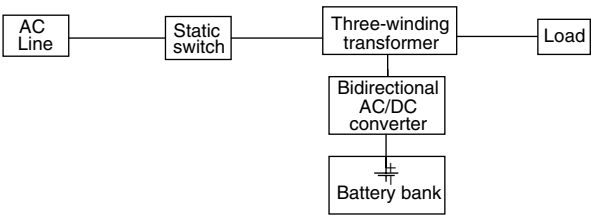

FIGURE 1.5
Block diagram of a typical off-line UPS using a three-winding transformer for electric isolation.

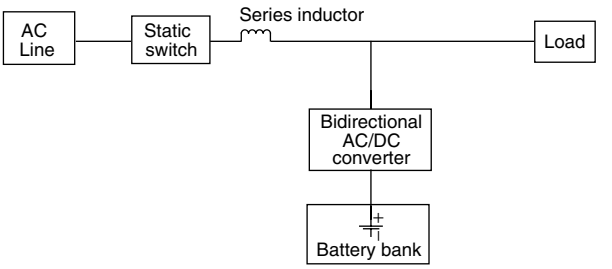

FIGURE 1.6
Block diagram of a typical line-interactive UPS system.

© 2005 by CRC Press LLC

When the AC line is within the preset tolerance, it feeds the load directly. The inverter is connected in parallel with the load and charges the battery. It may also supply the reactive power required to keep the power factor close to unity or to regulate the output voltage [15, 17–20]. As mentioned, this power-conditioning function of the inverter is used only in on-line line-interactive UPS systems. We use the equivalent circuit for the fundamental frequency of a line-interactive UPS system, as shown in Figure 1.7, to explain the power-conditioning function of the inverter.

The amplitude of V_i is determined by the battery voltage and the modulation index m of the PWM converter. Hence, it can be adjusted independent of the AC line voltage. The shift angle δ, between V_1 and V_i, can be varied as well.

We assume that the AC line voltage V_1 is 100% of its nominal, and the output voltage V_i is 100% of its nominal as well. The shift angle δ is determined by the real power demanded by the load.

$$P = \{(V_i\, V_1) \sin \delta\}/j\omega L \tag{1.1}$$

The series inductor voltage drop is designed to be small under normal rated conditions — usually $\delta \cong 15°$. Hence, the power factor is very close to unity under these conditions: $\cos\varphi = \cos(\delta/2)$. The phasor diagram for this case is shown in Figure 1.8.

By assuming a pure resistive load, the inverter supplies only the reactive power necessary to compensate the reactive voltage drop across the series inductor. When the load has a reactive part, the inverter will compensate it

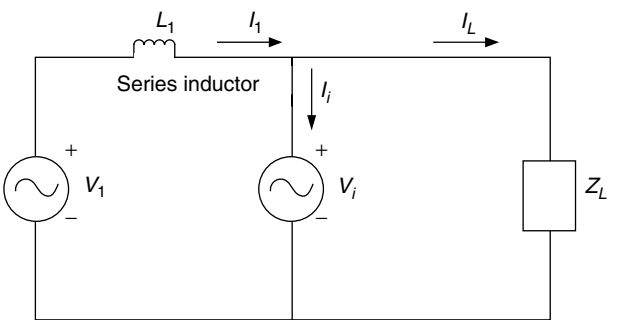

FIGURE 1.7
Equivalent circuit for the fundamental frequency of a line-interactive UPS.

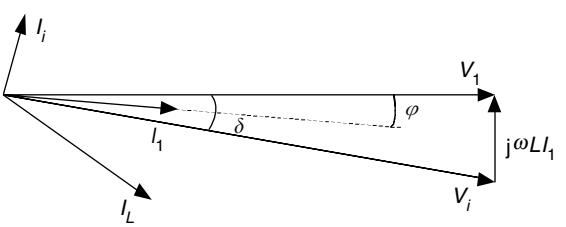

FIGURE 1.8
Phasor diagram for the equivalent circuit of Figure 1.7.

© 2005 by CRC Press LLC

as well. In fact, current drown from the AC line is always sinusoidal and kept in phase with the AC line voltage.

The principle of the output voltage regulation can be easily understood with the help of the phasor diagrams in Figure 1.9. The inverter supplies reactive power for undervoltage and consumes reactive power for overvoltage situations. Since it is desirable to draw only reactive power from the inverter, it is obvious that the power factor deteriorates when a voltage regulation is implemented. When the AC line is not available or is beyond the preset tolerance, the inverter supplies the load with energy from the battery set. As a result, it is rated to meet 100% of the power demanded by the load and the power demanded for charging the battery set. The static switch is turned off to prevent back feed to the AC line.

There are two operating modes for a line-interactive UPS: normal and stored-energy.

1.1.1.3.1 Normal Mode of Operation

The power flow during this mode is from the AC line to the load. The bidirectional converter plays the role of a charger for the battery set. It can also keep the output voltage relatively stabilized and sinusoidal or improve the power factor of the load with a proper PWM control. The current taken from the AC line is mainly the current for the load. In fact, no additional harmonics are injected from the UPS into the AC line. This is an important advantage compared to the conventional on-line double-conversion UPS.

In order to enable better regulation for the output voltage during this mode, a bulk constant voltage transformer can be added to the output; however, it is heavy, large, and expensive [19].

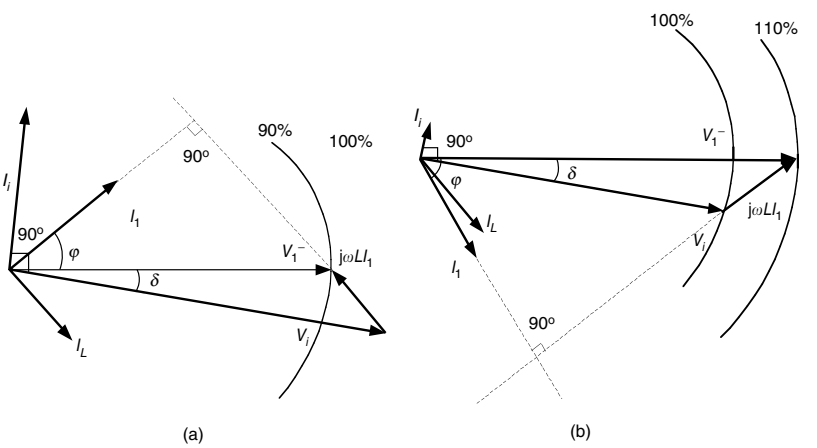

FIGURE 1.9
Phasor diagram for (a) undervoltage and (b) overvoltage situations.

© 2005 by CRC Press LLC

1.1.1.3.2 Stored-Energy Mode of Operation

In this mode, the bidirectional converter operates as an inverter and supplies the load with power from the battery set. The static switch disconnects the AC line in order to prevent back feed from the inverter. The duration of this mode is the duration of the preset backup time or until the AC line returns within the tolerance.

The main advantages of the line-interactive UPS systems are a simple design and, as a result, high reliability and lower cost compared to the on-line UPS systems. They also have good harmonic suppression for the input current. Since this is, in fact, a single-stage conversion topology, the efficiency is higher than that of the double-conversion UPS.

Its main disadvantage is the lack of effective isolation of the load from the AC line. The use of a transformer in the output can eliminate this; but, it will add to the cost, size, and weight of the UPS system. Furthermore, the output voltage conditioning is not good because the inverter is not connected in series with the load. In addition, since the AC line supplies the load directly during the normal mode of operation, there is no possibility for regulation of the output frequency.

The new series–parallel line-interactive topology, called delta-conversion UPS, can simultaneously achieve both unity power factor and precise regulation of the output voltage, which is not possible with a conventional line-interactive UPS. Its configuration is shown in Figure 1.10. It consists of two bidirectional converters connected to a common battery set, static switch, and a series transformer. The series bidirectional converter is rated at 20% of the output power of the UPS and it is connected via a transformer in series with the AC line. The second bidirectional converter is the usual inverter for a line-interactive UPS connected in parallel to the load and rated at 100% of the output power. The parallel converter keeps output voltage stable and precisely regulated by PWM control. The series converter compensates any differences between output and input voltages. It also controls the input power factor to unity and, at the same time, controls the charging of the battery. When the AC line is within the preset tolerance, most of the power is

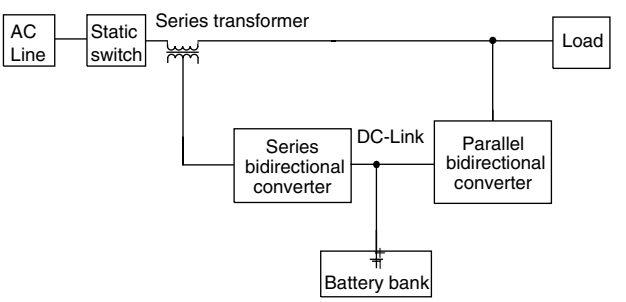

FIGURE 1.10
Block diagram of a typical series–parallel line-interactive (delta-conversion) UPS.

© 2005 by CRC Press LLC

supplied directly from the AC line to the load. Only a small part of the total power, usually up to 15%, flows through the series and parallel converters. This power is needed to compensate for any differences between the input and the output voltages and to make the input power factor unity. Since an important portion of the power (about 85%) flows without any conversion from the AC line to the load, the efficiency of this UPS is relatively high. Therefore, the delta-conversion UPS is used in high-power rating applications, where the efficiency is a key factor. However, the complicated control of this topology limits its applications. Another disadvantage is the lack of electrical isolation of the load from the AC line.

1.1.2 Rotary UPS

A typical rotary UPS is shown in Figure 1.11. It consists of an AC motor, a DC machine, an AC generator, and a battery bank. Electric machines are mechanically coupled. There are two operating modes: normal and stored energy. During the normal mode of operation, the AC line supplies the AC motor, which drives the DC machine. The DC machine drives the AC generator, which supplies the load. During the stored energy mode of operation, the battery bank supplies the DC machine, which in turn drives the AC generator. The AC generator supplies the load.

The rotary UPS systems are more reliable than the static UPS systems. However, they require more maintenance and have a much larger size and weight. But, they have many advantages making them desirable in high-power applications. One of the advantages of the rotary UPS systems is that the transient overload capability is 300 to 600% of the full load for rapid fault clearing. The transient overload capability for the static UPS systems is typically 150% for a short term. The performance of the rotary UPS systems with nonlinear loads is good because of the low output impedance. The input current THD is very low, typically 3% or less. The electromagnetic interference (EMI) is also low. The efficiency is usually 85% or higher [21, 22].

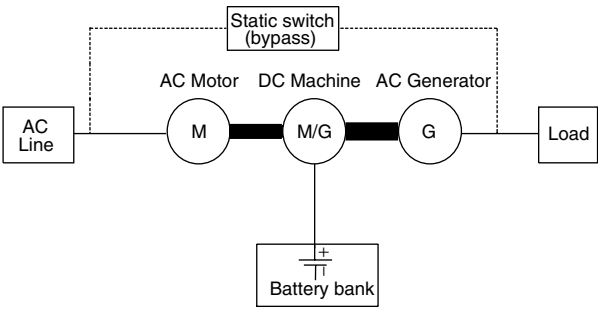

FIGURE 1.11
Block diagram of a typical rotary UPS system.

© 2005 by CRC Press LLC

1.1.3 Hybrid Static/Rotary UPS

Hybrid static/rotary UPS systems combine the main features of both static and rotary UPS systems. They have low output impedance, high reliability, excellent frequency stability, and low maintenance cost. These are because of the missing mechanical commutator [21, 22]. In Figure 1.12, a typical hybrid static/rotary UPS is depicted. It consists of a bidirectional AC/DC converter, an AC motor, an AC generator, a battery bank, and a static switch.

During the normal mode of operation, the AC motor is fed from the AC line and drives the generator. The AC generator supplies the load. The bidirectional converter, which behaves as a rectifier, charges the battery.

During the stored-energy mode of operation, the inverter supplies the AC generator from the battery set through the AC motor. In fact, the bidirectional converter, which behaves as an inverter, drives the AC motor. The AC motor drives the generator supplying the load. When an internal malfunction in the UPS system occurs, the static switch (bypass) is turned on and the load is supplied directly from the AC line. However, since the AC line and output voltage are not synchronized, the transition is not transient-free.

The AC generator is started on utility power to avoid starting current overloads allowing the inverter to be rated for the normal operation. After the AC generator is on, the AC line is disconnected and the supply to the AC generator is given by the inverter. It is relatively easy because of the large inertia of the AC generator. This configuration has the advantage that the transfer from the AC line to the inverter takes place under controlled conditions instead of under fault conditions when different undesired conditions can influence the transfer. Another good point is that the inverter is always on, allowing no transfer time for switching to the stored-energy mode of operation [21].

The main advantages of this UPS over the static UPS include low output impedance, low THD with nonlinear loads, higher reliability, and better isolation. Hybrid UPS systems are usually used in very high-power applications, that is, several hundreds kVA.

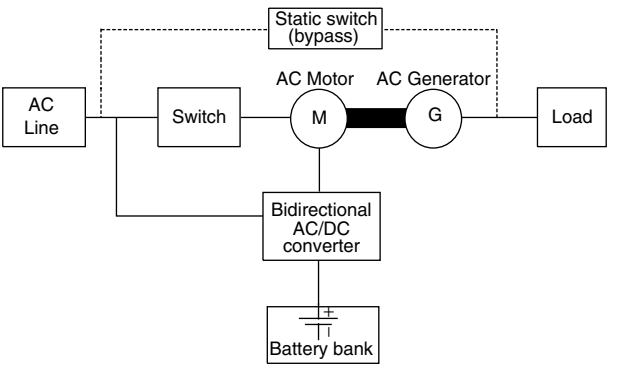

FIGURE 1.12
Block diagram of a typical hybrid static/rotary UPS.

© 2005 by CRC Press LLC

1.2 Batteries for UPS Applications

The most important features of the UPS systems are their reliability and availability. The component that influences this characteristic most considerably is the battery. Batteries must carry the power supply to the load when the AC line fails. If they are not capable of doing this, the whole UPS system fails, regardless of how well designed the power electronic circuit is. In addition, batteries usually determine where the UPS systems will be placed because they require more space and have a weight greater than all the other components of UPS systems. In many cases, batteries constitute considerable parts of the cost of the whole systems.

1.2.1 History

The first UPS systems were employed in large centralized installations to backup critical loads in hospitals and telecommunication offices. Batteries in these large installations were placed in separate, special buildings, which provided ventilation and allowed continuous maintenance. The type of batteries used was flooded lead–acid, which has a long life and excellent long-duration discharge rates, usually 5 to 20 h.

Nowadays, there is another approach for providing backup for critical loads — the distributed approach [23]. Here, smaller UPS systems are used to supply particular small loads. This tendency forced the UPS systems to move from special buildings to offices and hospital rooms. This has led to the requirement for compatibility with the office environmental and no-maintenance requirements. As a result, valve-regulated lead–acid (VRLA) or so-called sealed lead–acid batteries appeared on the market.

1.2.2 Valve-Regulated Lead–Acid Batteries

The basic lead–acid battery is a set of positive and negative electrodes consisting of lead or lead–alloy grids coated with a paste of active material composed of different lead compounds. The positive electrodes are separated from the negative ones by a fiberglass-retaining mat, which usually surrounds the positive plate. The battery is made wet by a sulfuric acid electrolyte solution. The discharge reaction is as follows:

$$PbO_2 + Pb + 2H_2SO_4 \rightarrow 2PbSO_4 + 2H_2O \tag{1.2}$$

Also, the recharge reaction is the reverse of Equation 1.2:

$$2PbSO_4 + 2H_2O \rightarrow PbO_2 + Pb + 2H_2SO_4 \tag{1.3}$$

As a result of recharge, the lead sulfate returns to lead dioxide on the positive plate and sponge lead on the negative plate. The efficiency of the

© 2005 by CRC Press LLC

recharge reaction can be 100%; but it depends on the state of charge (SOC) of the battery. When the efficiency of the reaction is less than 100%, the electrolysis of water occurs. As a result, evolution of hydrogen on the negative plate and oxygen on the positive plate take place.

$$2H_2O \rightarrow 2H_2 + O_2 \tag{1.4}$$

Charging of batteries above the manufacturer's recommended ratings or charging at these ratings but at higher temperatures causes additional evolution of hydrogen and oxygen. In a flooded electrolyte system, the evolved hydrogen and oxygen are vented out of the cell and the loss of water must be compensated. In VRLA batteries, the compensation of water is impossible. The batteries work on oxygen recombination. The hydrogen evolution is suppressed, and the evolved oxygen is recombined under pressure.

There are two basic types of VRLA batteries: absorbed electrolyte and gelled electrolyte. In the absorbed electrolyte design, the liquid electrolyte is contained in a highly absorbent separator, which isolates the positive plates from the negative plates. This type of battery is designed specifically for UPS applications and is capable of providing a very high short-duration current. The gelled electrolyte VRLA batteries are similar to the flooded design; but the electrolyte is in the form of a jelled mass. In addition, internal pressure is regulated in order to allow oxygen recombination. They can provide a high rate of short-duration currents; but generally, they are more suitable for long discharge applications such as telecommunications [24].

1.2.3 UPS Battery Features

The main requirement for the VRLA batteries designed for UPS applications is to provide a high short-duration current because the duration of the backup time for the UPS systems is usually short — from a few seconds to an hour — usually about 15 min [25]. There are two main differences between the typical VRLA batteries and UPS-designed VRLA batteries. First, in order to provide a higher current for a short time, the UPS-designed batteries need a more active surface area, which is why these batteries have a higher number of thinner plates. The second difference is that the UPS-designed batteries must have a lower internal resistance in order to carry higher currents at lower losses. To achieve this, battery manufacturers remove the fiberglass mat surrounding the positive plate. Instead, they mix active material with integrated fibers. This reduces the battery impedance. Apart from this, designers make the batteries with larger and heavier current conductors in order to carry higher currents.

1.2.4 Problems

Reducing the internal resistance of the batteries also has negative effects. Particularly, two separate problems occur by removing the fiberglass mat.

© 2005 by CRC Press LLC

First, the PbO_2 sedimentation is much higher. Second, the low internal resistance causes problems with the DC and AC ripples of the voltage across the batteries [26]. The DC ripples are the fluctuations in the unsmoothed rectifier output voltage. They increase the internal temperature of the batteries. Although this increment is usually a few degrees Centigrade, it is very harmful for the battery life because each degree Centigrade rise in temperature reduces the battery life by about 10%.

AC ripples are sinusoidal and are superimposed over the DC component. They are also classified as discharge and nondischarge type. When their amplitude is less than the DC component amplitude, as shown in Figure 1.13, the AC ripples are classified as nondischarged. When their amplitude is larger than the DC component amplitude, as shown in Figure 1.14, the AC ripple current becomes both positive and negative, and these AC ripples are classified as discharge AC ripples.

The nondischarge AC ripples have the same effect over the battery as the DC ripples. They increase the internal temperature of the battery. The discharge AC ripples lead to capacity walk-down caused by high-frequency shallow cycling (HFSC). Because the AC ripples are much larger in amplitude than the DC component, they drive the battery into charging and discharging cycles at a rate determined by the frequency of the AC signal. The low-frequency AC ripples are especially harmful for the battery SOC. Assume that we have a fully charged battery installed on a float charging system that has significant AC ripples. The DC float current is set at such a level as to compensate for any self-discharge and to provide some overcharge to keep both plates properly polarized. The superimposed AC discharge ripples drive the battery into charge–discharge cycles. The negative current will discharge the

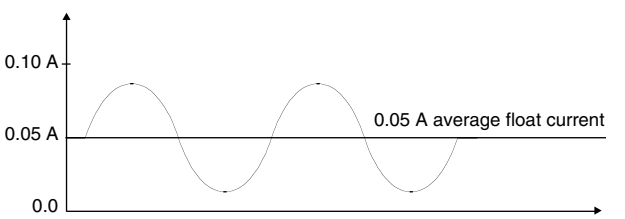

FIGURE 1.13
Nondischarge AC ripple current.

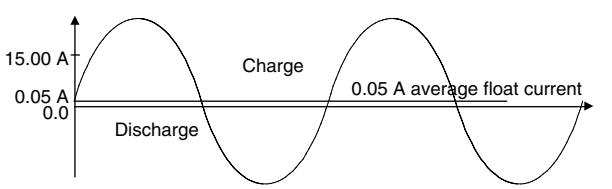

FIGURE 1.14
Discharge AC ripple current.

© 2005 by CRC Press LLC

battery with 100% efficiency. The positive current will charge the battery with an efficiency of about 10%. The remaining 90% of the power will go toward overcharging the battery, resulting in electrolysis of the water and evolution of hydrogen and oxygen. Because of the inequality of the power charged and discharged to the battery over one cycle, after a number of cycles, the battery will experience the so-called capacity walk-down. This process will continue until the battery reaches about 80% of its capacity, where the efficiency of both the charge and discharge processes is 100%. This HFSC causes premature failure of batteries, where the power quality supplied to the battery is poor.

1.2.5 Charging Strategies

Charging strategy for the VRLA UPS-designed batteries is a floating charge, where the battery is continuously connected to a constant current (CC) or a constant voltage (CV). Often, a combination of both is used, as shown in Figure 1.15. During the initial stage of the charging process, when the open-circuit voltage of the battery is low, it is charged at the CC mode. The battery voltage rises slowly in this period. After a certain level of power is absorbed by the battery, its voltage starts to rise quickly and, if not limited, goes into the gassing stage. To avoid this, the battery is switched to the CV charge mode.

However, this float charge method is difficult to perform for two reasons. First, the overvoltage, which is usually about 100 mV above the open-circuit voltage of the battery, is unevenly distributed among the cells in a series string of battery cells. Second, the overvoltage applied has different effects on the positive and negative plates in a single cell. Generally, the applied floating voltage is intended to be high enough to ensure that both the positive and negative plates are significantly polarized and, at the same time, the positive plate is in a region of minimal grid corrosion. Because of the oxygen recombination, the potential of the negative plate decreases and if this oxygen recombination is of a significant amount and the applied float voltage is not large enough, the potential of the negative plate can drop below the open-circuit potential, that is, it goes to the discharge mode. At the same time, because the floating voltage applied to the positive and the negative plates is constant, the potential of the positive plate will increase and eventually can enter the high-corrosion region. We can summarize that, for the common case, when the open-circuit voltage of a cell is 2.17 V at 100% SOC and the overvoltage is 100 mV, the

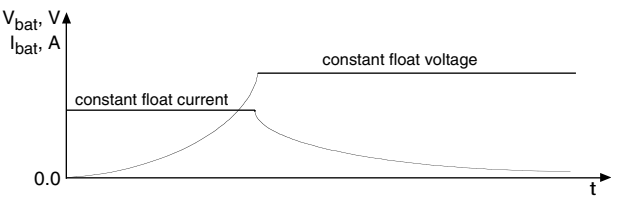

FIGURE 1.15
CC/CV charging method.

© 2005 by CRC Press LLC

applied floating voltage of 2.27 V cannot guarantee that all cells will maintain 100% SOC. If we apply a higher float voltage to ensure that both plates are properly polarized, the positive plate proceeds to the high-corrosion region, and substantial overcharge takes place. The solution is the so-called intermittent charging (IC) method, which was proposed for the first time by Don Reid in 1984. The concept is that the battery is charged with higher than 100 mV overvoltage for a short period of time and, after that, it is off-line for a longer period of time. The gain is that the higher floating voltage ensures that both plates are favorably polarized and, at the same time, the overvoltage is not of a short duration. There are two types of IC methods: time charge, where the battery is charged periodically, for example, 5 min every hour; and trigger voltage charge, where a threshold voltage level triggers the charge process on, and, when 100% SOC is achieved, the process is turned off [27].

1.2.6 Failure Category

Failures in batteries can be categorized into three types resulting in high impedance, low impedance, and deterioration of capacity. Failures resulting in high impedance are caused by the corrosion of plates, loose contact between the active material on plates, or low specific gravity of acid. Failures resulting in low impedance are caused by the short circuit between the plates. Failures resulting in the deterioration of capacity are caused by deep discharge, cycling usage, high temperature, or dryout [28].

1.2.7 Monitoring

Monitoring of flooded batteries is easy to implement. It is based on the cell voltage and level of specific acid gravity and water. Because of the physical constraints, we cannot rely on these parameters for monitoring VRLA batteries. We do not have access to the separate cells in monoblocks of the VRLA battery and to the acid solution inside the battery, which is why the monitoring of VRLA batteries is very difficult to perform, and the results are not very reliable. There are three basic methods for monitoring VRLA batteries: voltage-based, current-based, and impedance-based [28]. In voltage-based methods, lookup tables are used to detect any abnormalities in the discharge mode. In these tables, information about voltage level, as functions of discharge current and time of discharge is stored in computer memory. This information is continuously monitored. There are two problems associated with this method. First, monitoring is possible only during the discharge mode; hence, no information about SOC is available during the float charge. Second, high and low impedance failures can be detected surely by this method, but deterioration of capacity failures cannot be detected, which is why the results from this method may be misinterpreted.

The current-based monitoring method uses a discharge current or a float charging current as an information source. Hence, it is available both in flat

© 2005 by CRC Press LLC

charging and discharging modes. However, the charging current tends to change with aging of the battery. It is also a function of the temperature and applied cell voltage. Therefore, the danger of misinterpretation of the results exists. The third method is the impedance-based method. This approach is based on measurement of the relation between the voltage and current when injecting small AC currents or voltages into the battery. This is the so-called small signal method. Another method is to use large load current step-changes and to measure the relation of the voltage and current. Results from both small and large signal methods are subject to large misinterpretation and, generally, these methods are not reliable. In summary, it can be concluded that, presently, there is no highly reliable method available for monitoring VRLA batteries. This is a large, open field for research since the importance of monitoring is essential to ensuring the reliability and availability of the whole UPS system.

1.3 Flywheels for UPS Applications

Until recently, the only energy-storage technology available was the electrochemical battery, mostly lead–acid batteries. Even though the sales of batteries count at billions of dollars annually, there is still room for alternative technologies. Since the research and development in electrochemical technology have been conducted for a long time, the technology is quite mature and no major breakthrough is expected in this field in the near future. The alternative energy-storage technologies are super-capacitors, super-conducting magnetic energy systems (SMES), and flywheels. Among them, the flywheel system is the most promising technology for replacing the traditional electrochemical batteries as an energy-storage solution for a variety of applications, including power quality, UPS systems, telecommunications, land vehicles, and aircraft.

The concept of storing energy in flywheels mechanically as kinetic energy is quite old; but recent advancements in new materials science, magnetic bearing control, adjustable speed drives, and power electronics have revived interest in this old concept. Traditionally, flywheels were used only as high-power energy-storage devices for ride-through applications with a duration of several seconds. However, nowadays, there are flywheels on the market that can provide energy in the kWh range [29, 30].

1.3.1 Fundamentals

Flywheels are one of the oldest, simplest, and most common mechanical devices. Although when we talk about the flywheel battery, we think about a rotating mechanical device. It actually includes a motor/generator (M/G), a flywheel, a bidirectional converter, and control and communication circuitry. The concept of a typical flywheel battery is shown in Figure 1.16.

© 2005 by CRC Press LLC

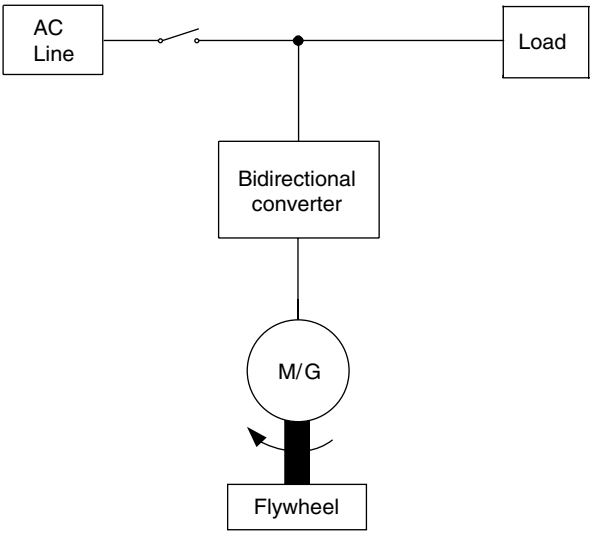

FIGURE 1.16
The modern concept of flywheel battery application.

The motor spins the flywheel, which stores kinetic energy. When it speeds up, it accumulates energy; when it slows down, it delivers energy. In the past, flywheels were used in a system where a large-mass flywheel was coupled with a rotating motor-generator unit, as shown in Figure 1.17.

Because of the fact that the flywheel and generator rotate at a system-dependent speed and the permissible frequency tolerance of the generator voltage is very narrow, the system could only deliver about 5% of its stored energy [31–33]. Recent advancements in power electronics and adjustable speed drives have allowed the development of highly efficient flywheel storage systems that are not system-dependable. A typical choice of a motor-generator is a permanent magnet, brush-less machine due to its high efficiency, low rotor loss, high-power weight ratio, and low noise [34]. Magnets with high-energy products such as neodymium–iron–boron are usually used. However, permanent magnet materials with high-energy products are prohibitively expensive. Synchronous reluctance and switched reluctance machines can compete with

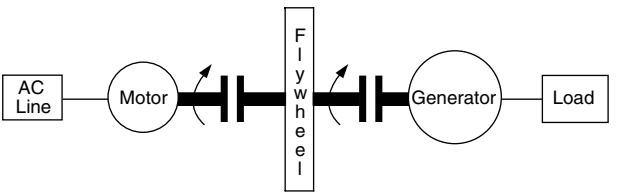

FIGURE 1.17
The old concept of flywheel battery application.

© 2005 by CRC Press LLC

permanent magnet machines in flywheels applications since they can achieve a high efficiency and do not require expensive materials [35].

One of the main components of the flywheel battery is the flywheel rotor, which we will henceforth call flywheel for simplicity. The flywheel is a rotating mass that stores energy mechanically in the form of kinetic energy. Kinetic energy stored in a rotating object is proportional to its moment of inertia and to the square of its rotational speed:

$$Kinetic\ Energy = \tfrac{1}{2} \times I \times w^2 \tag{1.5}$$

$$I = k \times M \times R^2 \tag{1.6}$$

where I is the moment of inertia, ω the rotational speed, M the mass, R the radius, and k the inertial constant, which depends on the shape of the object ($k = 1$ for rim and $k = ½$ for a solid disk of uniform thickness).

From Equation 1.5, it is obvious that for a given rotational speed, the amount of kinetic energy stored is larger for a larger mass. As a result, in the early years of development of flywheel technology, high-density materials, namely metals, were the natural choice for the flywheel rotors.

In order to optimize the energy-to-mass ratio, it is better that the object rotate at the maximum allowable speed. However, the centrifugal force for a rotating object is proportional to the mass of the object and to the square of its rotational speed as follows:

$$F_centrifugal = M \times R \times \omega^2 \tag{1.7}$$

This centrifugal force can rip a rotating object apart. Hence, while dense materials can store more energy, they are also exposed to greater centrifugal force. As a result, they fail at lower rotational speeds than the low-density materials with higher tensile strength.

Recent advancements in the development of different composite materials give the flywheel designers a new choice of material for the flywheel rotor, which allows much higher rotational speed. Different high-strength fiber composites are used depending on whether the designer wants maximum energy storage-per-unit-volume, as in aircraft or vehicular applications, or requires maximum energy storage-per-unit-cost, as in stationary applications. The cost for different composite materials can range between $12 per pound and $60 per pound [34] with quite different specific strengths [32].

The use of modern high-strength composite materials allows the design of an ultra-high speed flywheel system. However, the high speed brings new challenges. First, the use of conventional mechanical bearings makes no sense at such high speeds. Instead, advanced magnetic bearings are used. Active magnetic bearings are inherently unstable and require complicated control. In addition, the high level of aerodynamic losses at high speeds requires most high-speed flywheels to spin in a partial vacuum.

Safety requirements require containment of the whole system, which can assure that all the disintegration products at burst failure are kept within the containment.

© 2005 by CRC Press LLC

1.3.2 Classification

Flywheels can be classified into two groups based on the rotor speed: low-speed and high-speed flywheels.

1.3.2.1 Low-Speed Flywheel Systems

Low-speed flywheels rotate at up to 6000 rpm. The flywheel is usually made of high-strength engineering steel. Since the speed is not very high, the aerodynamic drag losses are not considerable; therefore, it is not necessary to operate the flywheel in a vacuum. A partial vacuum or lighter gas can be used to reduce the aerodynamic losses. Since the stored kinetic energy is proportional to the square of the speed and the speed is limited to not very high levels, a considerably larger inertia is necessary for low-speed flywheels, which results in a larger weight. Consequently, magnetic support for the conventional bearings is advisable to increase the bearings' life. Sometimes, even magnetic bearings can be employed. Low-speed flywheels are usually designed for short discharge times and are also referred to as power wheels. The rate at which energy can be recharged into or drawn out of the system is limited only by the motor-generator design; therefore, most of the cost goes toward the motor-generator unit. Since the motor-generator design is quite mature, the cost of the whole system is lower than that of the high-speed flywheels. The output frequency of the generator is between 100 and 200 Hz. For a motor-generator unit, both permanent magnet and conventional excitation can be considered. The principle design of the low-speed flywheel is shown in Figure 1.18.

Compared to the high-speed flywheels, weight and space requirements of the low-speed storage systems are doubled; but, the simpler construction results in lower cost, approximately five times lower. Low-speed systems are used only in stationary applications where cost considerations are of primary concern.

1.3.2.2 High-Speed Flywheel Systems

High-speed flywheels rotate at speeds above 10,000 rpm up to 100,000 rpm. Such high speeds are possible because of the relatively small mass moment of inertia of the rotor. It is wound from high-tech compound materials with a specific strength, five times higher than the steel. The high speed of the rotor allows for a much higher amount of energy to be stored, so the high-speed storage systems can also work as energy wheels. Most of the cost goes toward the energy-storage component. Since the production of the high-tech composite materials is still quite expensive, the overall cost of the high-speed storage systems is high. It is expected that, in the near future, with the advancement of material science, this cost will go down considerably. In addition, conventional bearings at high speed are of no use; therefore, magnetic bearings have to be employed. Furthermore, at such high speeds, aerodynamic losses are considerable. As a result, the rotor has to run in a vacuum. Consequently, no effective cooling can be provided. The rotor cannot have windings and is excited by

© 2005 by CRC Press LLC

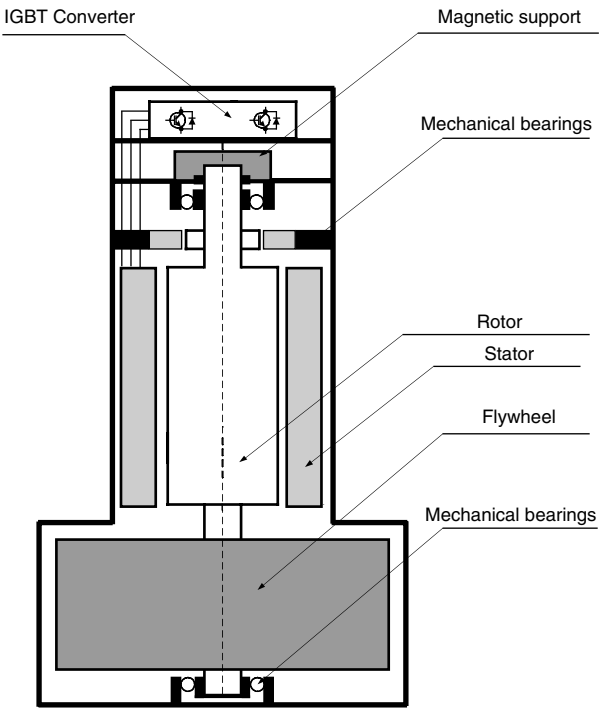

FIGURE 1.18
The principal design of a low-speed flywheel system.

permanent magnets. During the standby mode, hysteresis losses are produced in the stator core. To limit them, an ironless gas ceramic stator is used. A principal design of a high-speed flywheel system is shown in Figure 1.19.

For safety reasons, the whole system is placed in a containment that is capable of containing a loose rotor reaction or any other event, which can occur at the maximum operating speed. The output-generated voltage is unregulated in the range of a few kHz. The bidirectional converter has to be designed for both maximum voltage at high speed and maximum current at low speed. The high-speed flywheels have a low weight, small size, and high energy density, which make them suitable for vehicular applications. However, the technology is relatively new and not widely proven in the field.

1.3.3 UPS Applications of Flywheels

In some UPS applications, flywheels are a better solution than the traditional VRLA batteries. Some of the features of such UPS applications are as follows:

- A power rating of more than 200 kVA.
- Disturbances in the system are often and short, less than 1 min in duration.

© 2005 by CRC Press LLC

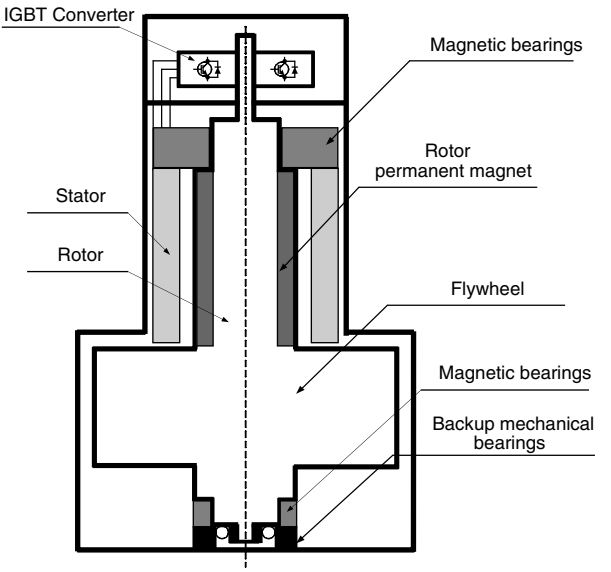

FIGURE 1.19
The principal design of a high-speed flywheel system.

- The system requires a diesel generator.
- Space is a critical design parameter.
- The customer is willing to consider life cycle cost over the up-front cost.

In such UPS applications, flywheels are much more effective than the VRLA batteries. A basic circuit diagram of such a configuration is shown in Figure 1.20. It consists of a rectifier/charger, a flywheel system, and an inverter [36]. The rectifier/charger continuously supplies the DC bus with power. Its power

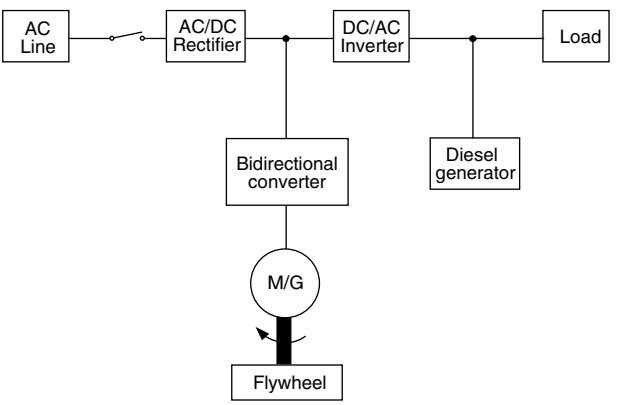

FIGURE 1.20
A basic circuit diagram of the flywheel-based UPS system with a diesel generator.

© 2005 by CRC Press LLC

rating is required to meet 100% of the power demanded by the load as well as the power demanded for charging and speeding up the flywheel. The flywheel is rated to supply power to the load during the backup time when the AC line is not available. The duration of this time depends on the start-up characteristics of the diesel generator and varies with different generators. The inverter is rated at 100% of the load power since it must supply the load during the normal mode of operation as well as during the backup time.

In other applications, flywheels are used along with the VRLA batteries in a hybrid UPS system [32]. A principal circuit of such a UPS is shown in Figure 1.21.

The flywheel system operates at voltages higher than the battery set. In this way, all short outages (more than 97%) are handled by the flywheel and only long outages are backed up by the battery set. This allows optimal design of both energy-storage systems — the flywheel system for the high-power application and the battery system for the high-energy application. The battery life is highly extended because most of the time the batteries remain in the standby mode and do not go into frequent discharge. Discarding in this way the weakest point of UPS systems, the unreliability of the VRLA battery, the overall system design results in a highly reliable UPS system.

Other applications of flywheel energy storage systems include vehicular, aerospace, distributed generation, and power quality applications.

In hybrid electric vehicles (HEV), some type of energy storage device is necessary to store the excess of energy from the internal combustion engine (ICE) and to drive the vehicle when the energy from the ICE is not enough. This is a typical high-power, high-cycle application. Flywheels have clear advantages over the electrochemical batteries here. If we consider regenerative braking, for example, when the vehicle is slowed down, a huge amount of energy is released for a very short time. Electrochemical batteries have an inherently slower rate of absorbing high power than the flywheels. Some advantages that

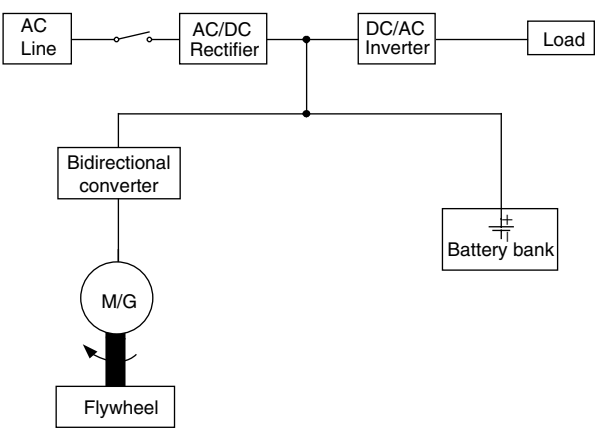

FIGURE 1.21
A basic circuit diagram of the flywheel-based UPS system with a battery bank.

© 2005 by CRC Press LLC

make flywheels more attractive than the electrochemical batteries for vehicular applications include a high-power capability, longer life, compactness, and lower weight. The compactness and lower weight come from the fact that flywheels can be deeply discharged and, as a result, do not need oversizing of the system, as is the case with the electrochemical batteries.

In the international space station (ISS), the energy storage system is a vital issue. The reliability is of the highest concern. In this sense, the superiority of flywheels over the electrochemical batteries is obvious. Monitoring of the state of charge and state of health of batteries is difficult and not highly reliable, while monitoring of flywheels is very reliable. A flywheel energy storage system is under development by the National Aeronautics and Space Administration (NASA). The initial results show that its life is three times longer and it can power the load for twice as long as a chemical battery, while the space and weight for both systems are the same [31].

Most of the distributed generation systems rely on stored-energy systems for proper operation. While electrochemical batteries are a good solution for load leveling, they are expensive and highly inefficient for load following applications. Flywheels with their high-power capabilities are perfect for such applications. In this sense, flywheels can increase the reliability and quality of the distributed generation systems based on fuel cells, photovoltaic arrays, wind turbines, and cogeneration gas turbines.

Nowadays, consumers require not only power with high reliability but also with high quality. About 97% of all power line disturbances last no longer than 3 sec [33] and more than 80% of them last less than 1 sec [31]. Chemical batteries are highly inefficient if a backup time of less than 1 min is required. This is an area of application preserved exclusively for flywheel systems. In fact, this is the most well-known commercial use of flywheels.

1.4 Comparative Analysis of Flywheels and Electrochemical Batteries

Flywheels are unique among the energy-storage devices with their ability to supply very high power. In fact, the rate at which energy can be recharged into or drawn out of the flywheels is limited only by the motor-generator design and can be very high. It is quite a different situation with lead–acid batteries. The rate of discharge in lead–acid batteries is proportional to the surface area of the plates and the internal resistance of the battery. The larger the area, the higher the rate of discharge, and the lower the internal resistance, the higher the current capability of the system. In order to increase the surface area of lead–acid batteries, designers have two options. The first is to make plates thinner and the other is to use more plates. The inherent problem with the first approach is that battery life is proportional to the thickness of plates: the thinner the plates, the shorter the life. The problem with the second approach is that, while the surface areas increase with an increase in

© 2005 by CRC Press LLC

the number of plates, the capacity also increases. Therefore, eventually the designer oversizes the capacity, which results in a higher cost, weight, and volume of high-power VRLA batteries.

Decreasing the internal resistance of the batteries leads to other problems. In order to decrease the internal resistance, battery designers remove the fiberglass mat surrounding the positive plate. Instead, they mix the active materials with the integrated fibers. This reduces the battery impedance, but leads to two problems that reduce the battery life. First, the PbO_2 sedimentation is much higher. Second, the low internal resistance causes problems with DC and AC ripples of the voltage across batteries [26].

Battery designers try to find the optimal compromise between all these issues in order to design batteries with a high rate of discharge. These efforts have led to the development of modern UPS batteries, which are capable of supplying high currents for a short period of time, that is, 10 to 60 min, in contrast with the traditional lead–acid batteries with a rate of discharge of 5 to 20 h. However, there are still many problems regarding the lead–acid batteries for high-power applications, such as

- a slow recharge rate,
- a narrow temperature operation range,
- no reliable method for monitoring the state of charge and state of health, and
- environmental issues.

Flywheel energy-storage systems provide a complete solution for all of the above problems. They have a very fast recharge rate and low temperature sensitivity. They are environmentally friendly. Monitoring is very reliable. By observing the speed, one can always see how much the stored energy is. Flywheels require very low or no maintenance. Furthermore, the rate of conversion of kinetic energy into electrical energy is limited only by the generator design, which makes flywheels extremely well suited for high-power applications. Flywheel energy-storage systems, however, should not be considered as a replacement for the electrochemical lead–acid batteries. Rather, they should be considered as a competitive alternative in high cyclic applications, where issues like duration of life, volume, weight, maintenance, temperature sensitivity, environment, and reliability are critical. Some examples of such applications are vehicular and aerospace applications, power quality applications, distributed generation, and UPS systems.

1.5 Applications of UPS Systems

In the past, UPS systems have been used as large installations in hospitals, telecommunication facilities, and data centers. Their main purpose was to supply the load during blackouts and the only available topology was the so-called on-line UPS. Later, the off-line UPS systems appeared on the

© 2005 by CRC Press LLC

market in response to the demand for small and inexpensive UPS systems designed to supply a particular small load. The main applications are personal computers. Then, line-interactive UPS systems came as a compromise between high-performance, but expensive on-line topology, and the less expensive, but poorer performance off-line topology [14]. At the beginning, their range of applications was in the low- and medium-power range; but now, the new delta-conversion line-interactive UPS systems have applications in installations of a few MW [15, 17, 37–39].

UPS systems not only supply energy during blackouts but also in most cases, provide some kind of power conditioning. This additional function of the UPS systems stems from two facts. First, loads are now much more sensitive to the quality of power than in the past. Second, nowadays, the power quality deteriorates as a result of the fact that utilities try to operate the systems as close to their limits as possible in order to be more competitive on the market. Today, UPS systems have much more diverse applications than in the past. They are now not only highly desirable but also a required standard in many cases.

There are presently two tendencies in UPS system development: distributed and centralized.

1.5.1 Distributed Approach

In a distributed approach, many separate UPS units operate in parallel to supply critical loads. UPS units are placed flexibly in the system to form a critical load network. A typical distributed UPS system is shown in Figure 1.22.

Distributed UPS systems have many advantages. They are highly reliable because of the redundancy. In fact, it is easy and inexpensive to achieve the so-called $N+1$ redundancy in distributed UPS systems, where N UPS units supply the load and one additional unit remains in reserve. The second advantage of the distributed UPS systems is their high flexibility. It is easy to increase the capacity of the system, when the load grows, by simply adding additional units. Another advantage is that the system is user-friendly with regard to

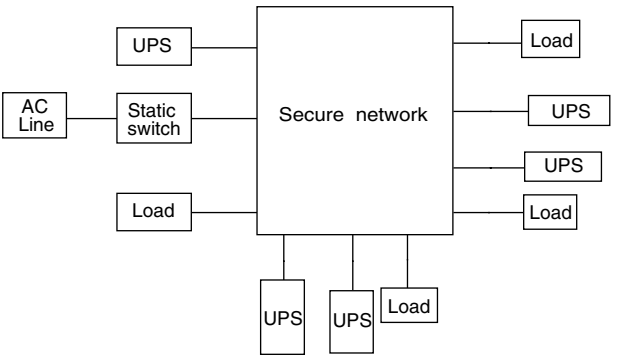

FIGURE 1.22
Block diagram of a typical distributed UPS system.

© 2005 by CRC Press LLC

maintenance because of the $N+1$ redundancy. We can simply turn off the defective unit for maintenance, while the system continues to operate using the remaining units. There are problems associated with distributed UPS systems. First, the load sharing between separate units has to be very fast and precise because of the fast dynamic response of each module and the low overload limit of a typical static UPS. In practice, this load sharing is difficult to achieve and requires very fast and complicated digital controllers. Second, monitoring the whole system is difficult and requires specially trained staff. Instead, the monitoring is separated between many people and as a result the reliability of the system as a whole decreases [23].

The distributed approach is expected to be more attractive for highly proliferated loads such as medical equipment, data processing, and telecommunications.

One interesting application in telecommunications is the combination of UPS systems and fuel cells, which replace the usual diesel generator [40]. Generally, the use of any kind of renewable energy source, such as photovoltaic arrays, wind turbines, or hydroturbines, in combination with UPS systems, seems attractive from an environmental point of view [41].

1.5.2 Centralized Approach

In the centralized approach, one large UPS unit supplies all the critical loads and the main aim is to ensure the continuous operation of the whole process rather than the operation of specific critical loads. This approach is more desirable for industrial and utility applications. The problems here are associated with the high relative cost for achieving redundancy and increasing the capacity with expansion of the load.

The centralized approach offers a clear advantage with respect to the maintenance and service of the UPS systems. A specially trained group of staff will be in charge of maintenance and service, reducing the risk of misuse of the system and increasing its reliability. The use of line-interactive topology in centralized UPS systems can provide some additional useful functions apart from ensuring the continuity of the power supply. By using a parallel-connected UPS to control the real and reactive power drawn from the AC line, one can use it for load leveling, voltage regulation, harmonic suppression, or reactive compensation.

Load leveling function is achieved by controlling the real power drawn from the AC line. It can be done by controlling the phase angle between the AC line voltage and the inverter's output voltage. In this way, the real power drawn from the AC line during the high price time zone of the day can be fixed to a particular level and the rest of the real power demanded by the load is supplied by the UPS. During the low price time zone, only the AC line supplies the load and the UPS draws additional real power to recharge the batteries. Of course, in order to implement this function, the capacity of the batteries must be higher than the usual capacity required for supplying the load during blackouts.

© 2005 by CRC Press LLC

The voltage regulation is easily achieved by controlling the reactive power supplied by the inverter. This control is done by alerting the amplitude modulation index of the inverter and from here the magnitude of the output voltage. This action is independent of the AC line voltage; hence, the voltage regulation is very robust. It is also easy to drive the inverter to compensate the reactive power demanded or produced by the load and, at the same time, to absorb any harmonics caused by the nonlinearity of the load. In this way, a high power factor can be achieved, which helps to better utilize the whole system and additionally to save on the energy bill.

This additional capability of the line-interactive UPS systems to control the real and reactive power flow from the AC line is valuable from the power system operation and control standpoint [42, 43]. Utilities use parallel UPS systems. They call them battery energy-stored systems (BESS) for load leveling, voltage stabilizing, frequency control, and active filtering. As a load-leveling device, BESS helps to cover the peak power demanded by the loads. It is well known how useful, from a power system operation point of view, a unity load power factor is.

BESS can also work as a frequency control device if its capacity is large enough compared to the overall power of the system. It can supply additional real power to the system in the case of generator outage in order to stabilize the frequency. The BESS working as a voltage stabilizer or as an active filter has already been explained.

By rapidly controlling both real and reactive power flow from a BESS, the power system operator is provided with a powerful control device against any oscillations in the system. In many features, a BESS resembles flexible AC transmission systems (FACTS) by controlling the voltage and phase angle out of the three parameters necessary to control the power flow in a power system: voltage magnitude, phase angle, and impedance. Full control over these three parameters can be achieved by the integration of series and parallel converters connected by a common DC-link. This system can be utilized as a power flow controller device for real-time-controlled FACTS [44]. The same approach can be used to improve the power quality at the point of installation on power distribution systems or industrial consumers. The so-called unified power quality conditioner (UPQC) can stabilize the voltage and compensate for reactive power, negative-sequence currents, and harmonics [45]. The same configuration is used to develop the latest line-interactive delta-conversion UPS systems. It overcomes the main drawback of the conventional line-interactive topology, that is, the inability to control, simultaneously, both the output voltage and the input current.

1.6 Parallel Operation

With the present rapid growth of loads especially sensitive to the quality of supplied power, UPS systems are becoming a necessity in many applications

© 2005 by CRC Press LLC

such as medical facilities, life-support systems, data storage and computer systems, emergency equipment, telecommunications, industrial processing, and on-line management systems.

There are two independent approaches in UPS systems: centralized, in which one large UPS unit supplies all the power demanded by the load; and distributed, in which a multiunit system operated in parallel supplies the power [23]. Both approaches have advantages and disadvantages, which have been discussed in previous sections. The centralized approach is impractical for some applications because of its high initial cost, site installation difficulties (large size and weight), and reduced reliability (single point of failure). The advantage of parallel multiunit UPS systems is especially apparent in high-power applications. Here, because of the limited battery voltage, high battery currents, sometimes up to kA, have to be drawn if a single unit is used. When several units are used, this high current is split between them, substantially reducing the overall price of the system [46]. Another advantage of the parallel multiunit UPS systems is that the reliability of the system can be improved by using the so-called $N+1$ redundancy. Here, N separate units continuously supply the load, and one additional unit remains in reserve. If one of the N operating units fails, it is turned off and the reserved unit starts operating instead. The failed unit can be repaired or replaced while the whole system continues to work.

The parallel UPS systems are also very flexible toward an expansion of the load. The capacity of the UPS can easily improve by simply adding additional modules.

1.6.1 Configurations

A typical on-line UPS consists of an AC/DC rectifier, a battery bank, and a DC/AC inverter. The concept of parallel operation can be applied to rectifiers alone, to inverters alone, or to the whole UPS. As shown in Figure 1.23, two or more AC/DC rectifiers can operate in parallel to supply the DC-link with rectified voltage/current. On the other side of the DC-link, one or more inverters supply the critical loads.

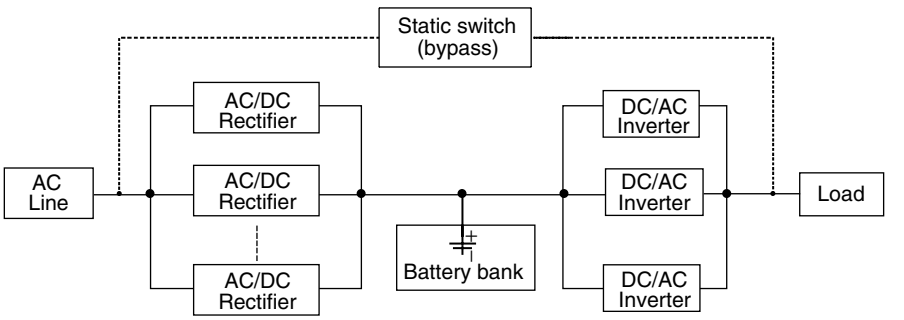

FIGURE 1.23
Block diagram of a typical on-line UPS with several rectifiers in parallel.

© 2005 by CRC Press LLC

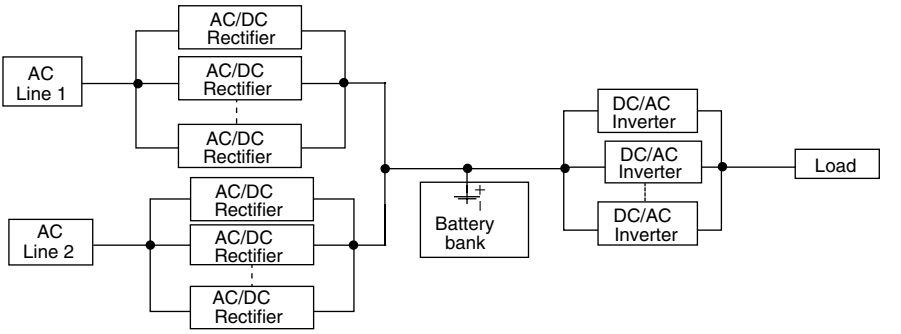

FIGURE 1.24
Block diagram of a typical on-line UPS with two dedicated AC lines.

The reliability of the system can be improved if two dedicated AC lines supply two separate rectifiers or two separate groups of rectifiers, as shown in Figure 1.24. The dedicated lines help to isolate the DC-link from the effect of the other loads on the AC line side. Each of the two rectifiers or each of the two separate groups of rectifiers is capable of supplying the full rated system load. This ensures redundancy of the power sources.

The concept of parallel operation can be taken further, as shown in Figure 1.25, where two separate rectifiers fed from separate AC lines formed a DC ring bus [47]. The rectifiers can be placed far from each other and do not require communication with each other. The load sharing is achieved by a built-in voltage drop. In fact, changes in DC voltage are used as the communication signals.

The principle of operation of the UPS systems in Figure 1.25 can be explained with the aid of Figure 1.26. A change in load causes a corresponding change in DC voltage. For example, a load increase causes a decrease in DC voltage. Rectifiers work in voltage control mode to increase their currents in

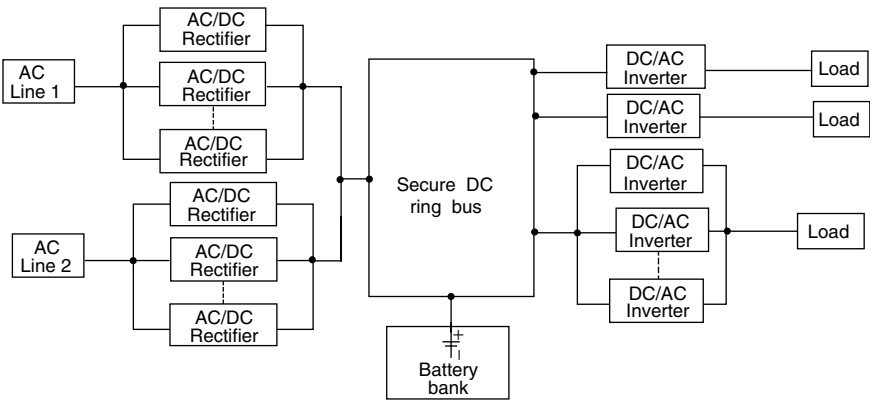

FIGURE 1.25
Block diagram of a typical UPS with several rectifiers in parallel forming a DC ring bus.

© 2005 by CRC Press LLC

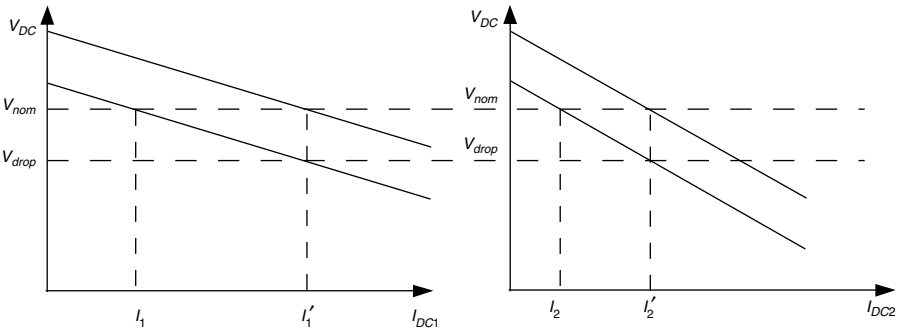

FIGURE 1.26
Voltage drop characteristics of the rectifier groups in Figure 1.25.

order to restore the proper voltage level. The overall increase in current ($\Delta I = \Delta I_1 - \Delta I_2$) is distributed between the separate rectifiers by the built-in voltage drops that the steeper the voltage drop, the less the load taken from the rectifier as shown in Figure 1.26. The configuration shown in Figure 1.25 is used mostly in industrial applications, where many different critical loads have to be supplied.

One additional advantage of such a system is that critical loads can be categorized by importance. The lower-priority loads may be switched off at a higher DC-link voltage. Therefore, the duration of the backup time for the most important loads can be extended.

The concept of parallel operation can also be applied to inverters [46]. Two or more inverters fed from a common DC-link supply loads connected to a critical bus, as shown in Figure 1.27.

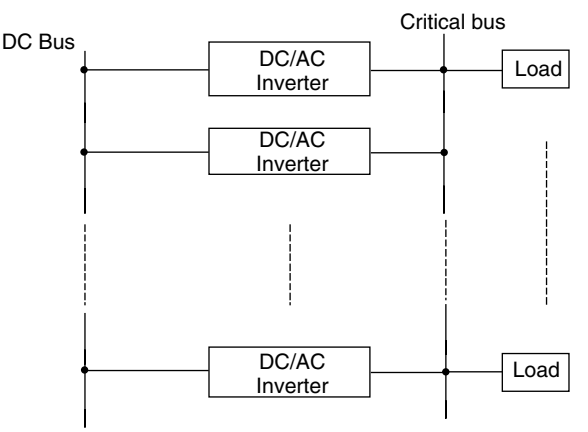

FIGURE 1.27
Block diagram of a typical UPS system with several inverters in parallel.

© 2005 by CRC Press LLC

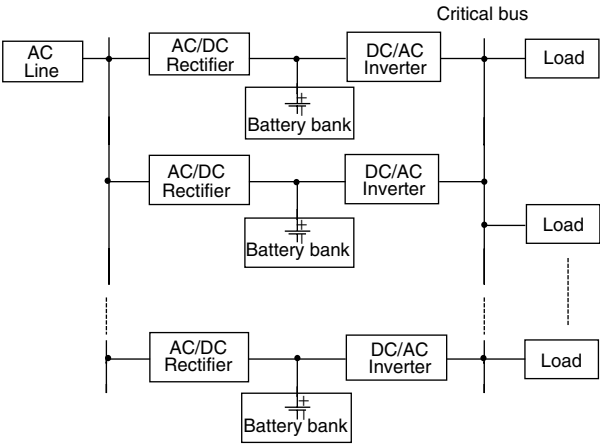

FIGURE 1.28
Block diagram of several on-line UPS systems working in parallel.

In Figure 1.28, several UPS units operate in parallel [48–51]. The modules are close to each other and parallel operation is achieved by communication between separate units.

A real distributed UPS system requires UPS units to be placed flexibly in the system building or industrial plant, forming the so-called secure network from which different critical loads are supplied [14, 48]. Such a distributed UPS system is shown in Figure 1.29.

Because a real distributed UPS system requires separate UPS units to be placed arbitrarily in the system, often far from each other, communication between them is impractical. Hence, the communication between separate units need not be decisive for proper parallel operation of the units. It can only enhance the performance of the system. The parallel operation of the separate units has to rely only on locally available parameters — voltage, current, and frequency. Similar to the control of the two rectifiers in Figure 1.25, inverters

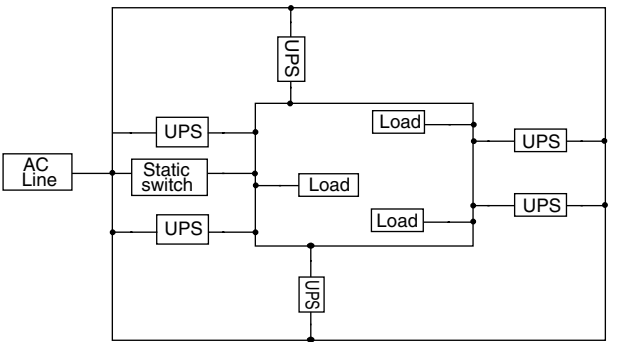

FIGURE 1.29
Block diagram of a distributed UPS system.

© 2005 by CRC Press LLC

in Figure 1.26 use the phase angle between the output voltages to control the real power flow and the magnitude of the output voltages to control the reactive power flow [14, 48, 51]. This is done by introducing built-in frequency and voltage drop characteristics in each inverter. The regulation of real and reactive power flow between separate units is explained in detail later in the discussions of the wireless independent control.

1.6.2 Fundamental Principles of Parallel Operation

The stable operation of a power system needs an exact balance between the generated and consumed real and reactive power. In this sense, implementing a good control over both P and Q is essential from operational and control points of view. The real power and the reactive power transferred between an inverter with output voltage V_{in} and a critical bus with voltage V_c are described by

$$P = (V_{in}\, V_c \sin \delta)/Z \tag{1.8}$$

$$Q = (V_{2in}/Z) - (V_{in}\, V_c \cos \delta)/Z \tag{1.9}$$

When V_{in} and V_c have the same phase, but different amplitudes, there is reactive power circulating. When V_{in} and V_c have the same amplitude, but different phases, there is active power circulating. When V_{in} and V_c differ in both phase and amplitude, there is active and reactive power circulating. When the power angle δ is small, which is usually the case, the real power flow depends primarily on δ, and the reactive power flow depends primarily on the voltage magnitude V_{in}. Control of frequency dynamically controls the power angle and, as a result, the real power flow. Because of the very low output impedance Z of the typical UPS inverter, even a very small value of δ results in a very large imbalance in the active power flow. Typically, a one-degree difference in phase leads to about 50% power disturbance. Under light loads, some inverters may be operating as rectifiers. Therefore, the output voltage of all inverters working in parallel must be kept strictly in phase by a PLL in order to guarantee equality of the output active power for the corresponding inverters. Even after all output voltages are locked in phase, reactive currents can still circulate between some inverters if their output voltage magnitudes differ from each other. This overloads the inverters unnecessarily. Since the overload capability of a typical static UPS is relatively low, usually 150 to 200%, it is obvious that good control over the output voltage magnitude of each inverter in parallel is essential. Basically, the control over frequency and voltage magnitude should not be too difficult to implement. The problem stems from the fact that UPS designers try to build UPS systems with very fast dynamic response characteristics in order to achieve good performance under nonlinear and step-changing loads. As a result, inverter output currents change quite rapidly. This, combined with the limited overload capability of the UPS, causes difficulties in the control of parallel operating inverters in UPS systems.

© 2005 by CRC Press LLC

1.6.3 Control Strategies in UPS Parallel Operation

1.6.3.1 Concentrated Control

In this control method, as shown in Figure 1.30, a PLL in each inverter is used to synchronize its output voltage in frequency and phase with the voltage of the critical bus, ensuring proper real power load sharing between separate inverters. A parallel control unit detects the total load current I, divides it by the number of inverters n in the system, and passes the signal I/n to each inverter. This signal is used as a reference for the minor current control loop, which takes the current through the output filter inductor as a feedback signal. Both signals are compared and an error is obtained, which is used to compensate any inequality in the voltage amplitude of different inverters. Therefore, a proper reactive power load sharing is achieved [51].

1.6.3.2. Master–Slave Control

Basically, the master–slave control is the same as the concentrated control. The difference is that only the master unit has enabled the PLL, which is in charge of providing a constant sinusoidal output voltage synchronized in frequency and phase with the critical bus voltage. The other inverters work as slaves, which are controlled to track the reference current provided by the

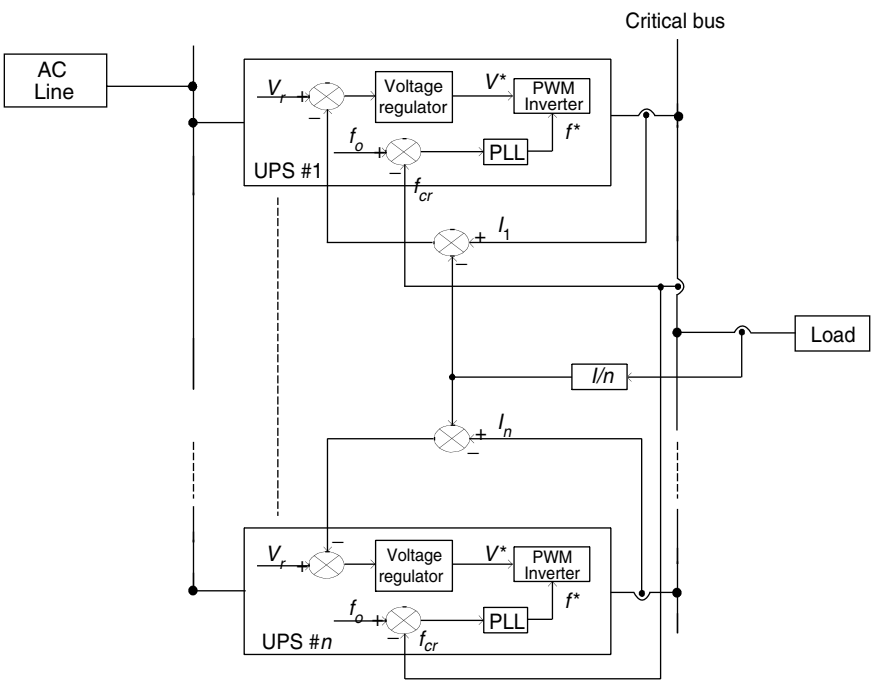

FIGURE 1.30
Block diagram of a typical concentrated control strategy.

© 2005 by CRC Press LLC

parallel control unit. The parallel control unit has the same function as in a concentrated control method. Hence, the reference current derives from the load current; therefore, it can serve as a frequency and phase reference as well. As a result, the slave units do not need to have separate PLL circuits enabled. If the master unit fails, one of the slave units replaces it by simply enabling its PLL circuit [46, 49–51].

1.6.3.3 Distributed Control

In the two methods described above, a failure in parallel control circuit can lead to the failure of the whole system. This is prevented in the distributed control method. Each inverter sends signals to the others. Compensating voltage and frequency signals are sent to each inverter [51].

1.6.3.4 Wireless Independent Control

In this method, there is no inner-connective load sharing wires between inverters. Control is based on information available locally at the inverter terminals: voltage, current, and frequency. Each inverter has a buildup frequency drop characteristic for real power load sharing and a buildup voltage drop characteristic for reactive power load sharing [14, 48, 51]. It is well known that when there is an imbalance in the generated and consumed real power in the system, there is a change in the system frequency. Hence, the frequency can be used as a communication signal between two inverters connected in parallel. For example, if the real power demanded by the two inverters in parallel is increased by $\Delta P = \Delta P1 + \Delta P2$, the frequency will initially decline by Δf, as shown in Figure 1.31.

The increase of power ΔP will be taken by the separate inverters according to the slope of their buildup frequency drop. New steady-state equilibrium point will be achieved at a lower frequency. In order to restore the initial frequency, the whole drop characteristic has to be shifted up vertically. A proper active power load sharing control is then implemented without communication needs between inverters. The same strategy is used for reactive power load sharing control; but a voltage drop is used as a communication signal. This control method increases the reliability and flexibility of the

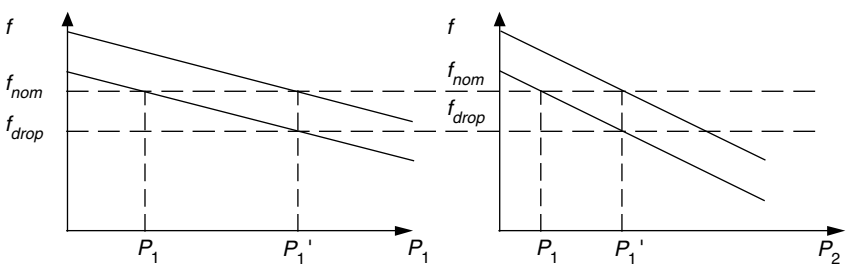

FIGURE 1.31
Frequency and voltage drop characteristics for inverters in parallel.

© 2005 by CRC Press LLC

whole system. It also eliminates any noise disturbances existing in the previously-discussed methods. The essential requirements are high-precision sensors and an extremely high speed in calculation.

1.7 Performance Evaluation of UPS Systems

The performance of a UPS system is evaluated in terms of several factors. The first and the most important factor is the quality of the output voltage. The output voltage should be sinusoidal with a low THD, usually less than 5%, even when feeding nonlinear or imbalanced loads. In addition, UPS systems should have a good transient response toward sudden changes in the load. They should also be capable of maintaining a good output voltage regulation. The circuit configuration and control strategy used are the most significant factors affecting the above mentioned performance features of a UPS.

With respect to the UPS topology, the on-line UPS configuration gives a superior performance followed by line-interactive UPS systems and finally by off-line UPS systems [14]. In on-line UPS systems, the inverter is connected in series with the load in both normal and stored-energy operating modes, and continuously provides power conditioning to the load.

In line-interactive UPS systems, the inverter is connected in parallel with the load and, during the normal mode of operation, provides only limited power conditioning to the load. Only during the stored-energy mode of operation can the performance of a line-interactive UPS be the same as that of the on-line UPS.

The inverter in off-line UPS systems is off during the normal operating mode. Hence, this topology does not provide any power conditioning via its inverter during this mode. Only if it has additional power conditioning circuits can it provide some power conditioning during the normal mode of operation. During the stored-energy operating mode, the performance of an off-line UPS can be the same as an on-line or a line-interactive UPS.

The second important factor in terms of how the performance of UPS systems is evaluated is the power factor of the input current. It is highly desirable if the power factor is unity or close to unity in order to meet the corresponding standards and to utilize the whole system better. The high-power factor means high displacement factor (DF) and low THD of the input current.

There are two techniques for improving the performance of UPS systems: passive and active. The passive technique uses filters for the harmonics in order to prevent them from flowing into the AC line. This is a good technique for low-power cost-sensitive applications.

For higher-power applications, active PFC techniques are used. In these techniques, either a PWM rectifier is utilized [52, 53] or an additional DC/DC PFC circuit is used [54, 55]. Basically, this is a DC/DC circuit that is controlled in such a way that it forces the rectifier to draw a sinusoidal current from the AC line, which is in phase with the input voltage. These active techniques are applicable only for on-line and off-line UPS topologies. For the line-interactive

© 2005 by CRC Press LLC

UPS systems, the PFC is achieved by controlling the power angle between the input and output voltages [15]. It is worth noting that when the inverter has to compensate for a disturbance in the input voltage, such as under- or over-voltage, the PFC function of the inverter has to be sacrificed.

The third important factor for evaluating the performance of UPS systems is the transfer time. In terms of this aspect, the on-line UPS topology is superior. Its configuration naturally ensures that the load is continuously supplied with power without any transfer time [14].

The transfer time in line-interactive UPS systems depends on the time necessary for converting the power flow from the battery bank through the inverter to the load. Improved performance in this sense is achieved by choosing the DC bus capacitor voltage at the battery side to be slightly higher than the floating voltage of the batteries. In this way, when the AC line fails, it is not necessary to sense the failure because the DC bus voltage will immediately decline under the floating voltage of the batteries and the power flow will naturally turn to the load.

Transfer time is the longest for off-line UPS systems, which depends upon the speed of sensing the failure of the AC line and starting the inverter.

The next performance factor of UPS systems is efficiency. In this sense, the UPS systems can be separated into a single conversion topology consisting of off-line UPS systems and line-interactive UPS systems; and double-conversion topology consisting of on-line UPS systems. Single-conversion topology has better efficiency, which should be taken into consideration in some special applications [17, 15].

The last, but not the least important performance feature of UPS systems is reliability. A simple power circuit implies better reliability. Furthermore, the simpler the control technique used, the higher the reliability of the system. The use of a bypass essentially improves the reliability of the UPS systems. This, of course, leads to the requirement of synchronization of the input and the output voltage in order to achieve seamless transition to the bypass mode of operation. As a result, the control circuit may be more complicated.

Another method for improving the reliability of the UPS systems is the employment of the so-called $N+1$ redundancy [23]. Here, N separate modules supply the load with power working in parallel, and one additional module stays in reserve. If any one of the operating N modules fails, it can be switched off and repaired or replaced while the additional module takes its place. The next step in achieving a high reliability is the so-called distributed UPS systems where several UPS systems are placed arbitrarily, making a secure bus from which several different loads are supplied.

1.8 Power Factor Correction in UPS Systems

UPS systems are ubiquitous solutions for power conditioning of critical loads. However, because of the inherent low-input power factor of the

© 2005 by CRC Press LLC

front-end rectifier, the UPS itself is considered as a harmonic pollution source for the utility and near loads. A typical uncontrolled rectifier draws a highly distorted nonsinusoidal current from the AC line. Its distortion factor shown in Equation 1.10 is low and, therefore, its power factor shown in Equation 1.11 is low even when feeding purely resistive loads with a displacement factor cos $\varphi = 1$. Usually, the power factor is less than 0.65.

$$DF = I_{1,\,rms}/I_{rms} \tag{1.10}$$

$$PF = P/S = P/(V_{rms} * I_{rms}) = (I_{1,\,rms}/I_{rms}) \cos\varphi = DF \cos\varphi \tag{1.11}$$

The benefits from a high power factor are well known: better utilization of the whole system and a low EMI. As a result, the International Standard Committee imposed the IEC-1000-3-2 standard, which requires the UPS systems to meet the limits of the input current harmonics. Accordingly, many passive and active power factor correction solutions have been proposed and widely discussed [54, 55]. Generally, the PFC techniques can be classified as passive or active.

1.8.1 Passive PFC Techniques

In passive PFC techniques, passive LC filters are connected at the input of a rectifier. The filter prevents injection of harmonics from the rectifier to the AC line. Passive filters have high efficiency and low cost. Passive techniques are simple and robust; hence, they are very reliable. Yet, the inductor and capacitor are bulky and heavy, which limits their applications as a single solution only in low-power ratings. These techniques are usually used along with different active PFC techniques, which reduce the harmonic and reactive content of the input current, allowing the input filter to be smaller.

1.8.2 Active PFC Techniques

Active PFC techniques can be classified into two types. The first one consists of PWM rectifiers controlled in continuous conduction mode (CCM) to achieve good output voltage regulation and high input power factor. The second one consists of a PFC circuit, which operates in discontinuous conduction mode (DCM) to force the rectifiers to draw sinusoidal currents from the utility. PWM rectifiers controlled in PFC techniques are usually used in high-power applications, especially when high performance is required. The rectifier is controlled by an outer voltage loop for output regulation and inner current control loops for shaping the input current according to their sinusoidal reference. The main problem here is that when driving the rectifier to obtain a high input power factor, substantial low-frequency voltage ripples appear on the DC side. It is essential in UPS applications that these low-frequency DC ripples are reduced as low as possible because the battery impedance is very low and all DC ripple currents generated by the DC voltage ripples flow into the battery.

© 2005 by CRC Press LLC

This results in heating of the battery, which is very detrimental to the battery's state of health as described in previous sections.

It is usually necessary to connect a very large electrolytic capacitor or a passive LC filter to the DC side in order to reduce the low-frequency voltage ripples, as shown in Figure 1.32. However, such a large capacitor or LC output filter is not desirable because of the short lifetime of the capacitor, the inherent parameter variation of the circuit with time, and the impracticality of downsizing the whole system.

Another way of reducing the DC output voltage ripples is to increase the switching frequency. In Nishida et al. [52], a single-phase PWM bridge rectifier, which takes into account the DC-side voltage ripples, is controlled by a predictive instantaneous current control scheme in order to achieve unity power factor. It can be seen that when the switching frequency is increased from 7.2 to 18 kHz, the power factor becomes substantially higher and the DC output voltage ripples become smaller. Increasing switching frequency implies higher losses. Soft-switching techniques, as described in Mao et al. [55], can significantly increase the efficiency of the rectifier.

An essential requirement for all CCM PFC-controlled PWM rectifiers is a precise detection and processing of the input AC line current and precise processing

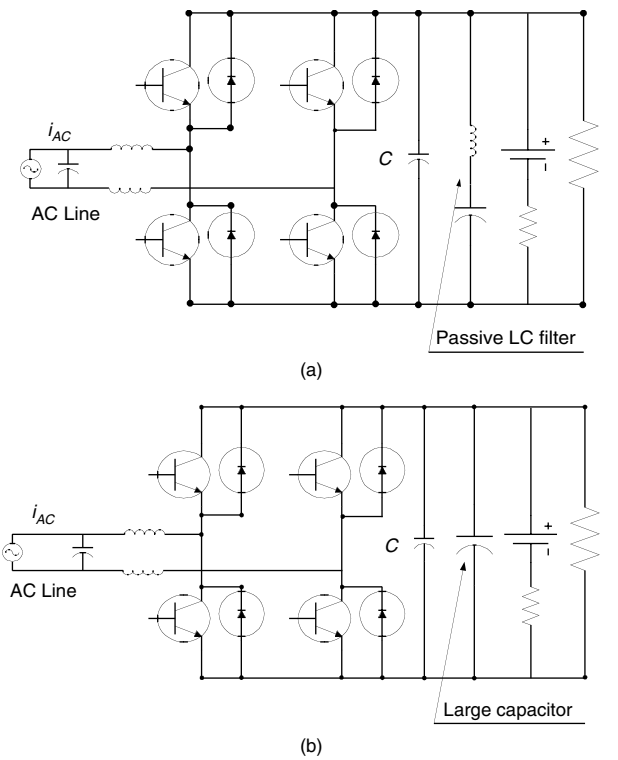

FIGURE 1.32
PWM rectifier with (a) an LC output filter and (b) a large output capacitor.

© 2005 by CRC Press LLC

of the feedback signals, which makes the control circuit more complicated and eventually more expensive. In DCM-controlled PFC circuits, the control strategy is simpler and less expensive. There are two separate approaches in DCM-controlled PFC circuits: double- and single-stage conversion.

In the double-stage conversion PFC approach, as shown in Figure 1.33, the rectifier is followed by an input current shaper stage, which provides power factor correction by forcing the rectifier to draw sinusoidal current, which is in phase with the input AC voltage and with low THD.

It has a loosely regulated output voltage at the intermediate DC bus, which serves as an input to the second stage of a DC/DC converter, which is in charge of providing tightly regulated output voltage to the inverter and to the battery. The efficiency of this approach is not good because of the two power conversion stages. It also requires at least two power switches; but the control is simple and hence the whole system is very reliable. The switch in the input current shaper (ICS) stage is controlled in DCM at a constant frequency. In this method, the peak input current naturally follows the input AC voltage.

A single-stage PFC, as shown in Figure 1.34, integrates the input current shaper and the following DC/DC converter into one single stage. It has one shared switch and one controller. The energy-stored element, usually a capacitor, is placed in series with the load. The single-stage PFC approach usually has a better efficiency; but the control complexity is increased. In addition, the power semiconductor devices may have a higher voltage and current stress than with the two-stage PFC approach. As a result, the single-stage approach is not always better than the two-stage approach in terms of cost and reliability [56]. A combined approach is proposed as a compromise, where a portion of the energy is supplied directly to the load and the rest of the energy is double-converted.

The above mentioned discussions are related to the on-line and off-line UPS systems. For line-interactive UPS systems, the PFC technique is different. Here, the inverter is connected in parallel with the load. It is capable of supplying all reactive and harmonics currents required to keep the power factor close to unity [15, 17–20].

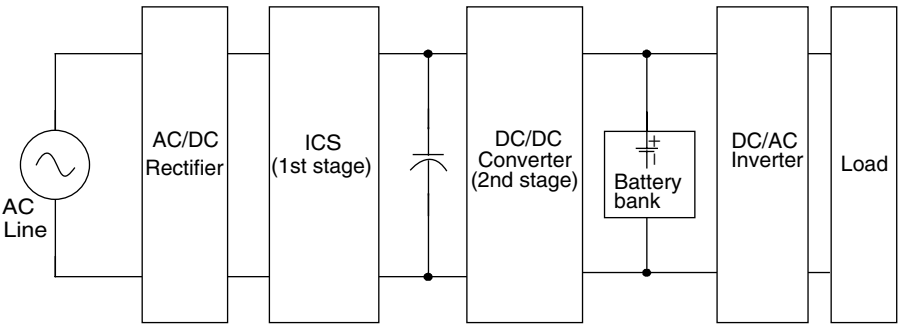

FIGURE 1.33
UPS system with a double-stage conversion PFC circuit.

© 2005 by CRC Press LLC

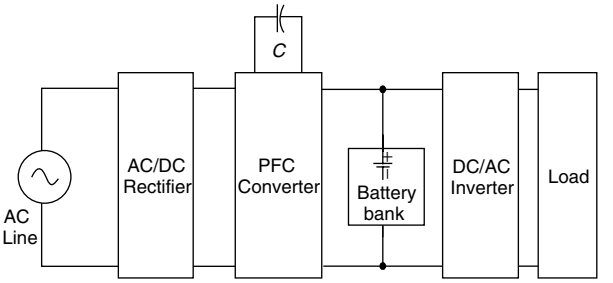

FIGURE 1.34
UPS system with a single-stage conversion PFC circuit.

1.9 Control of UPS Systems

THD of the output voltage and dynamic responses of a UPS system are among the most important performance features of the UPS. They depend mostly on the control strategy applied to the UPS inverter. In this sense, the inverter's control strategy immediately follows the UPS topology as the second most important factor, which determines the overall performance of the UPS. The simplest method to deal with a high output voltage THD is to increase the switching frequency and to use appropriate LC output filters. For a given THD, by increasing the switching frequency, the LC filter will be smaller. However, with increasing switching frequency, losses increase accordingly, which is why for high-power rating applications, the switching frequency is limited usually up to 2 kHz.

The aim in the design of the inverter LC output filter system is to achieve zero output impedance, hence zero THD even with nonlinear loads [57]. The problem is that the output filter inductance has some nonzero impedance, which causes distortion in the output voltage when feeding nonlinear loads. Different PWM techniques have been proposed to compensate for filter output impedance and reduce the output voltage distortion. The simplest one compensates only the harmonics caused by the nonlinearities of the inverter, such as blanking time, switching delays, component voltage drops, DC-link voltage fluctuations, and rise and fall times of the devices. However, a sinusoidal voltage at the output of the inverter does not guarantee a sinusoidal voltage at the load terminals. This technique still has a good steady-state performance with linear loads. It is implemented as a single-voltage loop strategy.

1.9.1 Single-Voltage Control Loop Strategy

This strategy, as shown in Figure 1.35, uses a single feedback loop to provide a well-regulated output voltage with low THD. The feedback control can be continuous [58] or discontinuous [59–61]. Analog techniques are used in

© 2005 by CRC Press LLC

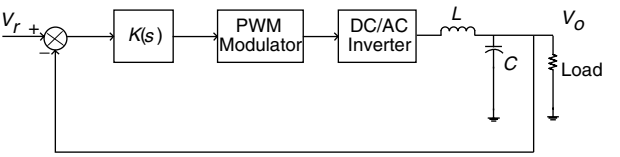

FIGURE 1.35
Block diagram of a single feedback loop.

the continuous approach. The most usual continuous feedback control is SPWM, which can be of natural sampling type, average type [62], or instantaneous type [63].

In the natural sampling type, the peak value of the output voltage is detected and compared with a reference voltage in order to obtain the error, which is used to control the reference to the modulator.

The average approach is basically the same; but the sensed voltage is converted to an average value and is then compared with a reference signal. These approaches control only the amplitude of the output voltage and are good only at high frequencies. They are easy to implement; but they have very slow dynamic responses with step-changing and nonlinear loads.

In instantiations voltage feedback SPWM control, the output voltage is continuously compared with the reference signal-improving dynamic performances of the UPS inverter [63]. The speed of the dynamic responses depends only on the switching frequency, which cannot be made very high in higher power rating applications. Another disadvantage of this approach is that harmonics are generated in the output voltage around the switching frequency. In addition, the dynamic response is still not fast enough. Another approach is based on digital control techniques. Discrete-time control strategies are generally of two types: optimum PWM techniques [64] and deadbeat techniques [58–61]. In digital optimum PWM techniques, the switching angles are calculated in order to minimize specific harmonics in the output. These techniques have a very good steady-state performance with linear loads; but with nonlinear and step-changing loads, their performance is unsatisfactory [65]. The deadbeat control technique shows better performance with nonlinear loads. In this technique, based on predicted and sensed output voltage, the exact length of the switching interval can be computed in real time so that the exact value of the desired output voltage can be obtained. The disadvantages of the deadbeat control technique are that it is computationally intensive and, for this reason, it is feasible only at relatively low frequencies. It also shows poor performance with step-changing loads.

1.9.2 Multiple Control Loops

Better performance even with nonlinear and step-changing loads can be achieved by multiple control loop strategies [65]. As shown in Figure 1.36, there are two control loops: an outer and an inner loop. The outer control

© 2005 by CRC Press LLC

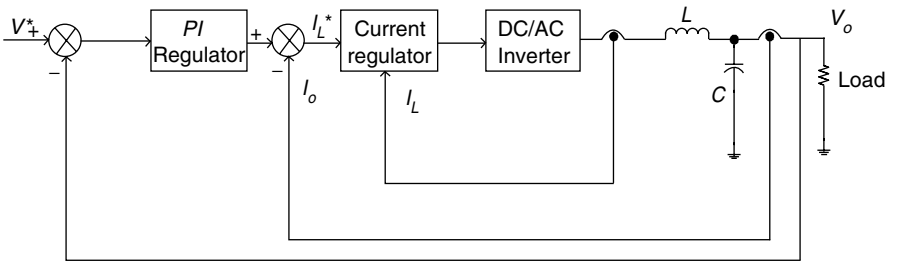

FIGURE 1.36
Block diagram of a typical control system with multiple feedback loops.

loop uses the output voltage as a feedback signal, which is compared with a reference signal. The error is compensated by a *PI* integrator to achieve a stable output voltage under steady-state operation. This error is also used as a reference signal for the inner current regulator loop, which uses the inductor [65] or the capacitor [66] output filter current as a feedback signal. The minor current loop ensures fast dynamic responses, enabling very good performances with nonlinear or step-changing loads.

The basic current regulators used as minor current loops are hysteresis regulators, sinusoidal PWM regulators, and predictive regulators.

1.9.2.1 Hysteresis Current Control

In a typical hysteresis regulator, the reference signal is compared with the feedback signal. The sign and predetermined amplitude of the error determine the output of the modulator, which has two possible levels $\pm V_{out}$. The duration between the two successive levels of V_{out} is determined by the slope of the reference signal. The output voltage tracks the reference signal within the upper and lower boundary levels $\pm\Delta V$ [67–69]. This hysteresis control has fast transient responses; but the switching frequency varies widely, which is undesirable because it generates additional harmonics. To eliminate this drawback, an improved constant-frequency hysteresis current control regulator can be implemented, as presented in Sae-Sue et al. [68]. In Sae-Sue et al. [68], in order to keep the switching frequency constant, the hysteresis band varies with a function of Cos(2ω); but the implementation of the this technique is complicated.

Hysteresis current controllers have fast transient responses. They are preferred for operation at high switching frequencies. The switching losses restrict their applications to lower power levels.

1.9.2.2 SPWM Current Control

In the SPWM control technique, the output voltage feedback is compared with a sine reference signal and the error voltage is compensated by a *PI* regulator to produce the current reference. The current through the inductor or the capacitor is sensed and compared with the reference signal. After being

© 2005 by CRC Press LLC

compensated by a P regulator, the error signal is compared with a triangular waveform to generate an SPWM signal for switching control. The SPWM current control has a constant switching frequency and also provides fast dynamic responses [66, 67].

1.9.2.3 Predictive Current Control

In this method, the switching instants are determined by suitable error boundaries. When the current vector touches the boundary line, the next switching state vector is determined by prediction and optimization in order to minimize the error [70]. Predictive current control requires a good knowledge of the load parameters.

All these current regulators are typically used as an inner loop to regulate the current in the filter inductor. The current reference for the current regulator is obtained by summing together the error in an outer voltage loop with the actual load current to yield the rated output voltage.

Control for three-phase UPS systems is basically the same. Additional problems are that one must take care of the coupling interference between different phases and unbalanced loads. Generally, for UPS systems operating with fixed-frequency three-phase outputs, control is implemented in stationary (a, b, c) coordinates with correction for phase-lag produced by the control loop [69]. When UPS systems supply a variable frequency application such as AC-adjustable speed drives, the phase error changes with frequency and is difficult to compensate. For such applications, a rotating (d, q) reference frame is preferred, resulting in DC control loops.

1.10 Converters for UPS Systems

A block diagram of a typical single-phase on-line UPS system is shown again in Figure 1.37. It consists of a rectifier, an inverter, a bidirectional DC/DC converter, and a battery bank. In the following sections, a comprehensive review of different converter topologies employed in on-line UPS systems is presented.

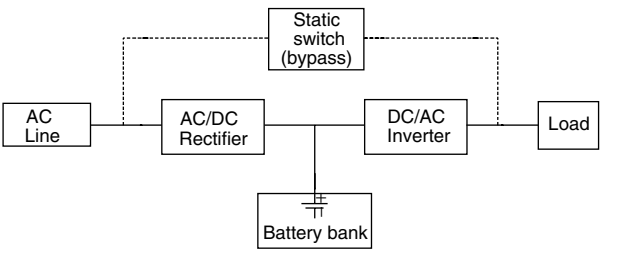

FIGURE 1.37
A block diagram of a typical single-phase on-line UPS.

© 2005 by CRC Press LLC

1.10.1 Rectifiers

The purpose of an AC/DC rectifier in a UPS system is to produce DC voltage with quality sufficient for proper operation of the DC/AC inverter at the back end of the UPS system. Rectifiers are classified into two main categories, uncontrolled and controlled rectifiers, depending on the type of silicon switches used.

1.10.1.1 Uncontrolled Rectifiers

Uncontrolled rectifiers use diodes as switches. A full-bridge uncontrolled rectifier is shown in Figure 1.38.

Diodes D_1 and D_2 conduct during the positive half cycle of input voltage V_s. Diodes D_3 and D_4 conduct during the negative half cycle. Capacitor C is chosen large enough to limit the ripples of the DC voltage to a preset value. Since capacitor C is quite large, the current drown from the source is highly distorted, as shown in Figure 1.39.

This results in a poor power factor, which is the main drawback of uncontrolled rectifiers. Another drawback of uncontrolled rectifiers is that V_{dc} is equal to the peak input AC voltage. When a higher DC voltage is desired, a voltage doubler uncontrolled rectifier can be employed. Its topology is shown in Figure 1.40.

In this topology, D_1 charges capacitor C_1 to the maximum value of the input voltage during the positive half cycle of V_s. Accordingly, D_2 charges C_2 to the maximum value of the input voltage during the negative half cycle of V_s. The output DC voltage is twice the maximum value of the input AC voltage. Besides the advantage of a higher output DC voltage, this topology also has less number of diodes compared to the full-bridge rectifier. It should be mentioned that the voltage stresses across the diodes for voltage-doubler topology are twice as large as those for the full-bridge rectifier. Another disadvantage of the voltage-doubler topology is that it uses two electrolytic DC capacitors, which are bulky.

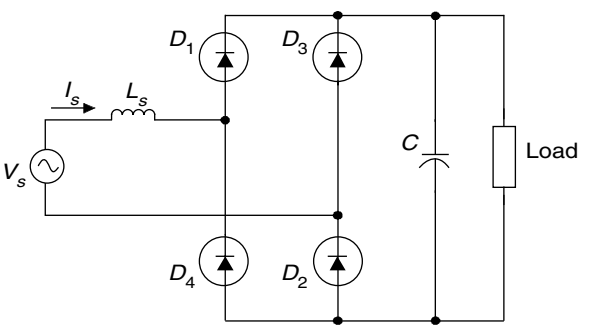

FIGURE 1.38
A full-bridge uncontrolled rectifier.

© 2005 by CRC Press LLC

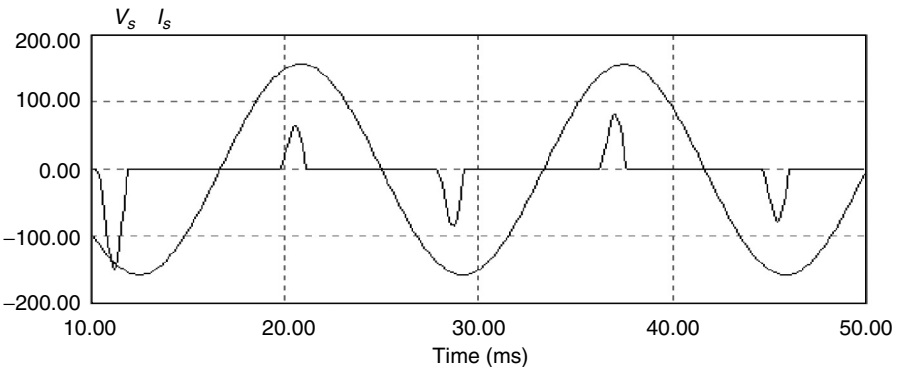

FIGURE 1.39
Input source current and voltage for the uncontrolled rectifier of Figure 1.38.

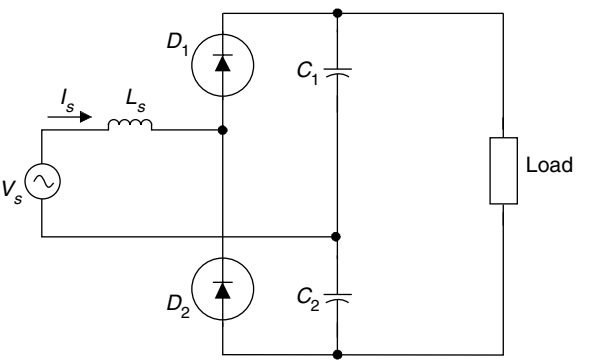

FIGURE 1.40
A voltage doubler uncontrolled rectifier.

The clear advantages of uncontrolled rectifiers are their simplicity, reliability, and low cost. Their main drawback is the poor power factor, which limits the use of uncontrolled rectifiers and opens the market for controlled AC/DC rectifiers.

1.10.1.2 Controlled Rectifiers

Controlled rectifiers use thyristors, MOSFETs, or IGBTs as the switching devices. A full-bridge controlled rectifier with four active switches (IGBTs) is shown in Figure 1.41.

The rectifier consists of switches S_1, S_2, S_3, and S_4, electrolytic DC capacitor C, and input current shaping inductor L_s. The topology has four different switching vectors: S_1/S_2, S_1/S_3, S_2/S_4, and S_3/S_4. By switching S_1, S_2, S_3, and S_4, the input current can be shaped to be sinusoidal and in phase with the input voltage, as shown in Figure 1.42.

© 2005 by CRC Press LLC

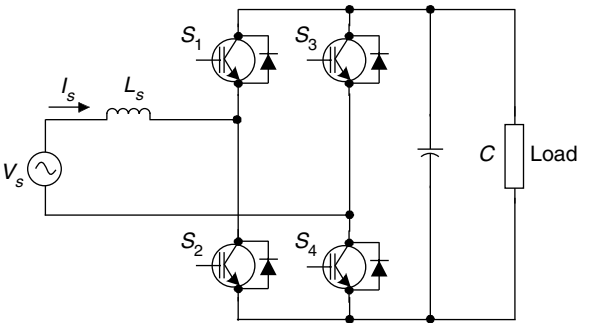

FIGURE 1.41
A full-bridge controlled rectifier.

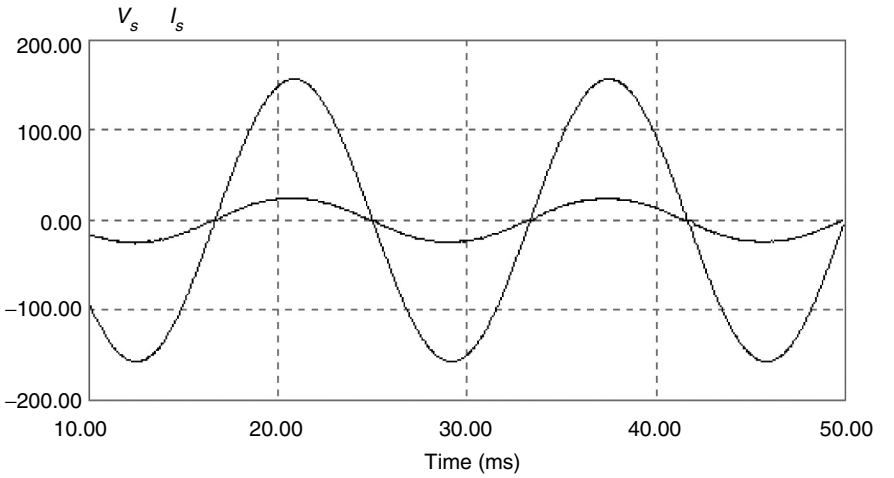

FIGURE 1.42
Input source current and voltage for the controlled rectifier of Figure 1.41.

At the same time, the output DC voltage can be tightly regulated at a preset value V_{dc}, which is always larger than the peak value of the input AC voltage. The simulation result for the DC output voltage is shown in Figure 1.43.

In this way, the tolerance of the on-line UPS system to variations in the input voltage is increased. As a result, the backup batteries do not go into frequent charge/discharge cycling when the input voltage drops a little below its nominal value. This increases the battery life considerably.

The desire to drive the cost down results in different topologies of full-bridge controlled rectifiers with reduced number of switches. In Figure 1.44, a controlled rectifier with two active switches and two diodes is shown.

Switch S_1 shapes the input current during the positive half cycle and switch S_2 shapes it during the negative half cycle. The overall cost of this topology is lower than that of Figure 1.41, with four controlled switches. The

© 2005 by CRC Press LLC

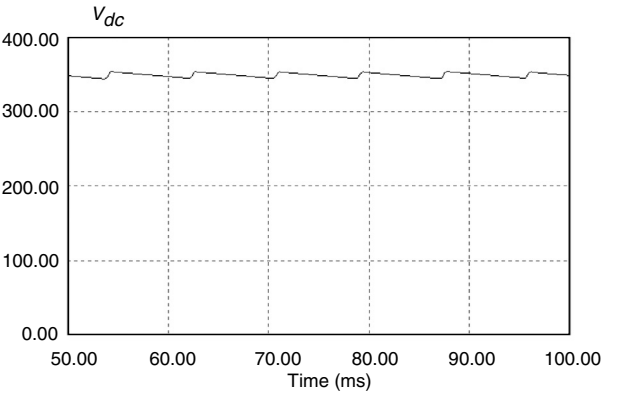

FIGURE 1.43
DC bus voltage for the controlled rectifier of Figure 1.41.

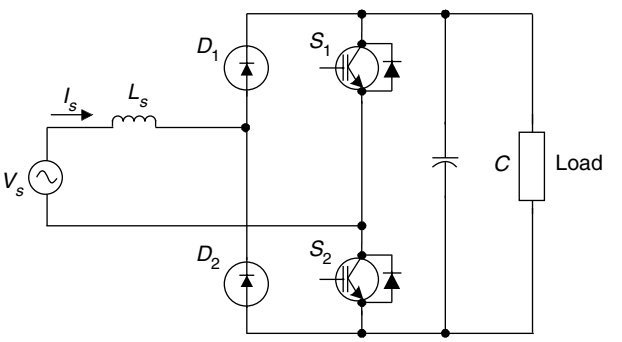

FIGURE 1.44
A full-bridge controlled rectifier with two active switches.

cost is lower because diodes are cheaper than IGBTs and because there is a cost related to the control of the IGBTs, that is, gate drivers and power supplies for the gate drivers. Although the control flexibility of this topology is more limited, the power factor can still be unity as shown in Figure 1.45. However, the input inductor L_s is larger than that of Figure 1.41.

The concept of reducing the number of active switches can be expanded further as shown in Figure 1.46, where a full-bridge uncontrolled rectifier is connected in series with a boost converter. The boost converter consists of switch S_1, inductor L_{dc}, and diode D_5.

When the switch S_1 is closed, the current through the inductor L_{dc} increases. When it is open, the inductor current decreases. In this way, the input current is kept sinusoidal and in phase with the input voltage, as shown in Figure 1.47.

It should be mentioned here that the core of the current shaping inductor in this topology is larger in order to avoid saturation due to the fact that the inductor current is pure DC.

© 2005 by CRC Press LLC

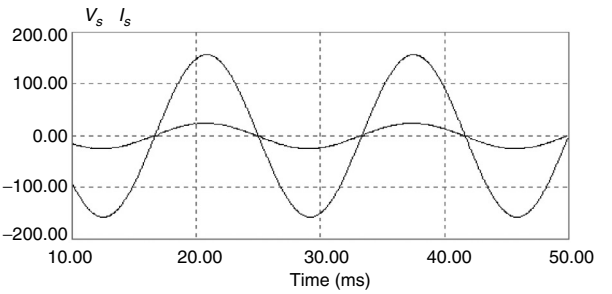

FIGURE 1.45
Input source current and voltage for the controlled rectifier of Figure 1.44.

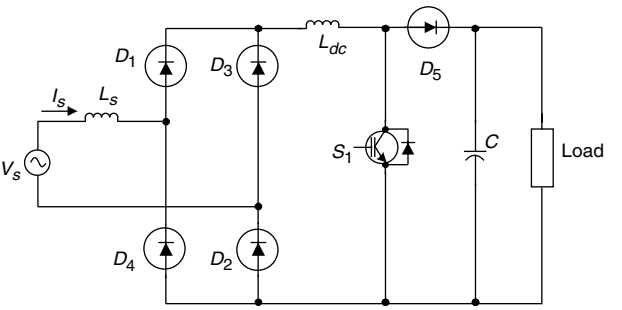

FIGURE 1.46
A full-bridge AC/DC rectifier with boost DC/DC converter.

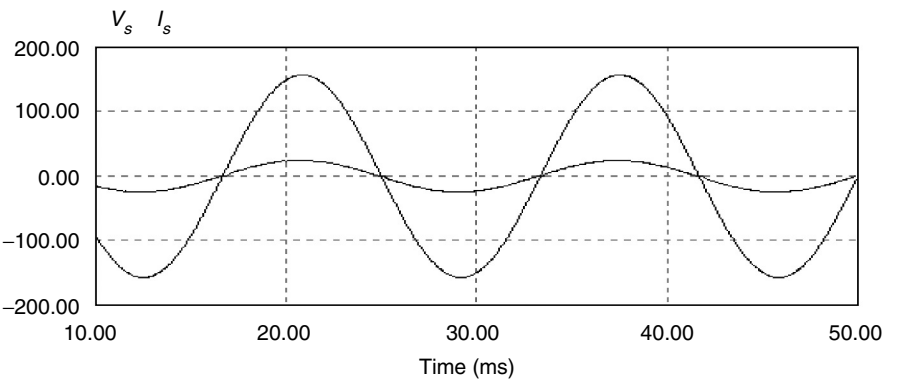

FIGURE 1.47
Input source current and voltage for the controlled rectifier of Figure 1.46.

The controlled voltage-doubler is shown in Figure 1.48.

During the positive half cycle, when the switch S_2 is on, the inductor current increases, and, when S_2 is off, the current decreases. In this way, S_2 shapes the input current during the positive half cycle. Accordingly, S_1 shapes the input current during the negative half cycle of V_s.

© 2005 by CRC Press LLC

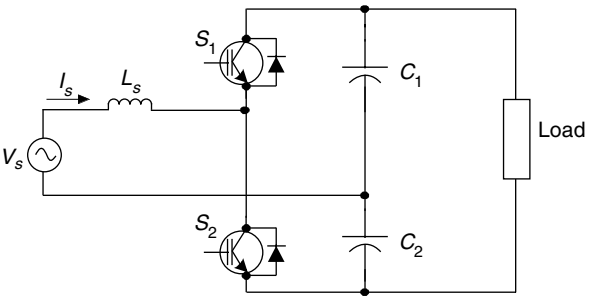

FIGURE 1.48
A controlled voltage-doubler rectifier.

1.10.2 Inverters

1.10.2.1 Basic Principles of Operation

There are two types of single-phase inverters: half-bridge inverter and full-bridge inverter [16]. A typical half-bridge inverter topology is shown in Figure 1.49. The split DC bus consists of two equal DC capacitors, C_1 and C_2, connected in series and two switches (IGBTs), S_1 and S_2, connected in series. The input DC voltage (V_{dc}) is equally divided between the two capacitors. By turning on and off switches S_1 and S_2, the voltage applied across the load can be $+V_{dc}/2$ or $-V_{dc}/2$. When switch S_1 is on, switch S_2 is off and the load voltage is $+V_{dc}/2$. Also, when switch S_2 is on, switch S_1 is off and the load voltage is $-V_{dc}/2$. To avoid shoot-through faults, there is always a dead band between the time when one of the switches is turned off and the other is turned on. The duration of the dead band should be large enough to allow the switch that is turned off to close before the other switch, to start conducting. The advantages of the half-bridge inverter topology are a lower

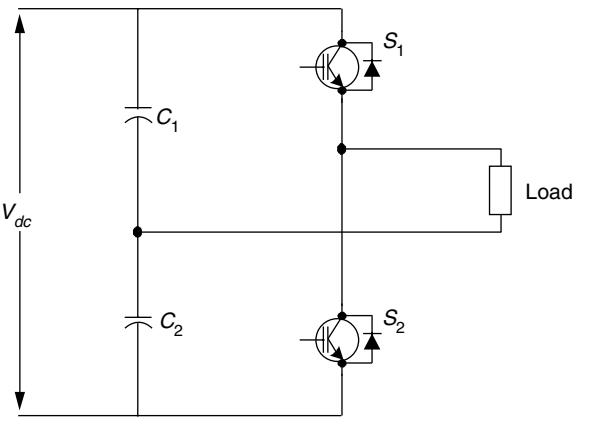

FIGURE 1.49
Half-bridge single-phase DC/AC inverter.

© 2005 by CRC Press LLC

number of switches and simple control. However, it suffers from two main inherent disadvantages. The first one is poor utilization of the input DC voltage. The second one is that only bipolar PWM switching schemes can be applied with this topology. This inherently requires a larger output filter and generally leads to lower efficiency.

Because of the above mentioned disadvantages, the use of the half-bridge inverter topology is limited to the low-power applications. For medium- and high-power applications, the full-bridge inverter topology is usually used [71]. A typical full-bridge inverter topology is shown in Figure 1.50.

The full-bridge inverter consists of DC capacitor C and four switches (IGBTs), S_1, S_2, S_3, and S_4, connected in series two-by-two in two inverter legs. By turning on and off the switches, the voltage applied across the load can be $+V_{dc}$, $-V_{dc}$, or 0. When switches S_1 and S_2 are on, switches S_3 and S_4 are off and the load voltage is $+V_{dc}$. When switches S_3 and S_4 are on, switches S_1 and S_2 are off and the load voltage is $-V_{dc}$. In addition, when switches S_1 and S_3 are on, switches S_2 and S_4 are off and the load voltage is 0. Similarly, when switches S_2 and S_4 are on, switches S_1 and S_3 are off and, accordingly, the load voltage is 0. Again, to avoid shoot-through faults, there is always a dead band between the time when one of the switches in an inverter leg is turned off and the other is turned on.

1.10.2.2 Pulse Width-Modulated Switching Scheme

In PWM switching schemes, the output voltage is directly proportional to the duty cycle of the switches and the amplitude of the DC bus voltage V_{dc}. The output voltage can range from $-V_{dc}$ to $+V_{dc}$. Since the amplitude of the input DC voltage is usually fixed, the only way to shape the output voltage is to control the duty cycle of the switches. In order to do so, in the case of a PWM technique, a sinusoidal reference signal oscillating at the desired frequency is compared with a high-frequency triangular carrier waveform, as

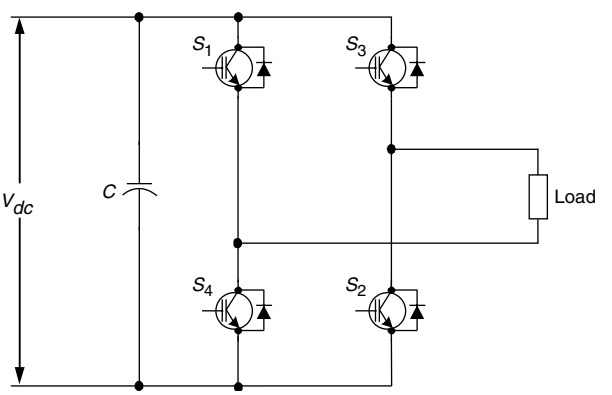

FIGURE 1.50
Full-bridge single-phase DC/AC inverter.

© 2005 by CRC Press LLC

shown in Figure 1.51. This PWM technique is basically known as the bipolar switching scheme. The frequency of the triangular carrier waveform determines the inverter switching frequency and is generally kept constant at an amplitude of V_{tri} [71].

It is necessary to introduce a few terms before the discussion on the PWM technique. The triangular waveform, V_{tri}, in Figure 1.51, basically oscillates at the switching frequency f_s. It is this frequency that decides the frequency at which the inverter switches are turned on and off. On the other hand, the control signal, $V_{control}$, is used to modulate the switch duty

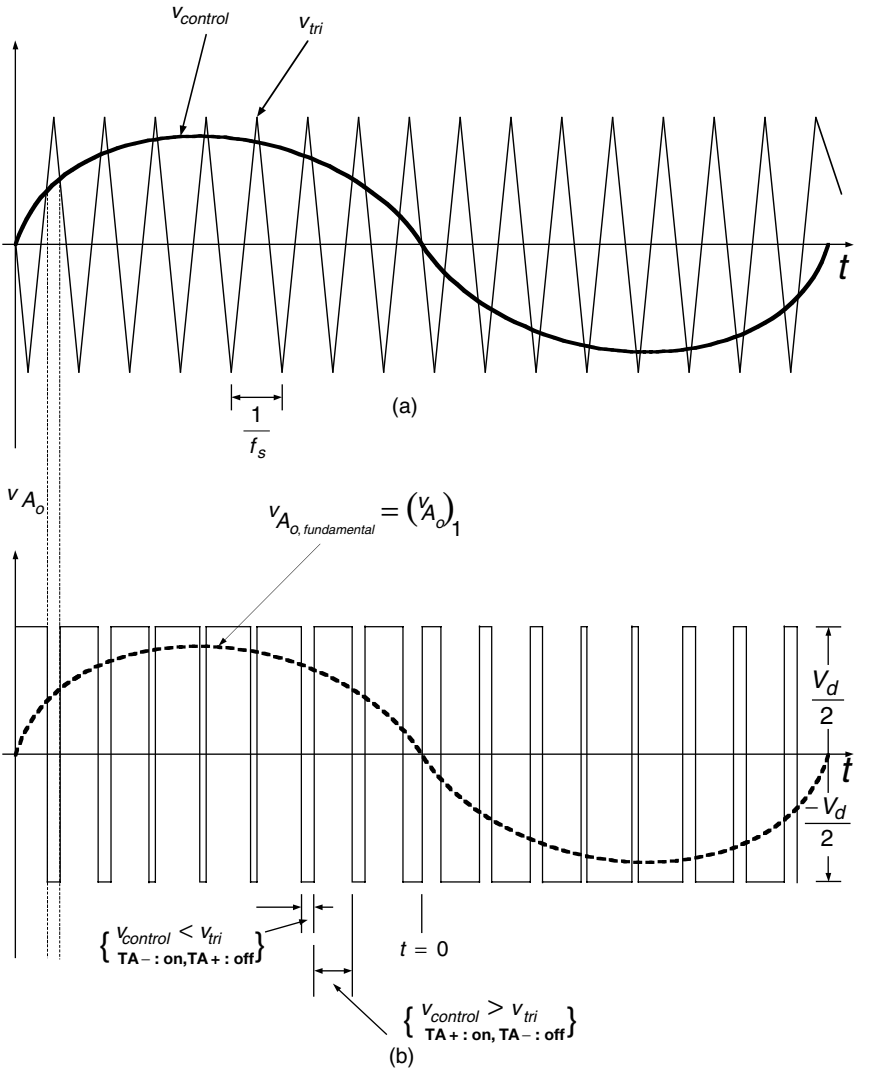

FIGURE 1.51
Diagrammatic representation of the bipolar PWM switching technique.

© 2005 by CRC Press LLC

ratio and oscillates at the frequency of f_1. This is basically the desired frequency at which the fundamental component of the output voltage oscillates. Furthermore, the output voltage as mentioned earlier is not a pure sinusoidal waveform and consists of voltage components oscillating at harmonic frequencies of f_1 [71].

From Figure 1.51, the important terms of amplitude and frequency modulation ratios can be defined. The amplitude modulation ratio, m_a, is defined as follows:

$$m_a = \frac{\hat{V}_{control}}{\hat{V}_{tri}} \tag{1.12}$$

Here, $V_{control}$ is the peak amplitude of the control signal, whereas V_{tri} is the peak amplitude of the triangular carrier signal and is generally maintained constant. The value of the ratio m_a is generally less than 1. Therefore, the amplitude of the fundamental frequency component is linearly dependent on the amplitude of the modulation index.

Referring back to Figure 1.51, the frequency modulation ratio m_f can be defined as follows:

$$m_f = \frac{f_s}{f_1} \tag{1.13}$$

In the full-bridge DC/AC inverter of Figure 1.50, the switches S_1, S_2, S_3, and S_4 are controlled by comparing the magnitudes of $V_{control}$ and V_{tri}. The output voltage across the load may vary accordingly and is as follows:

$$v_{control} > v_{tri}, \quad S_1, S_2 : \text{ON} \quad \& \quad S_3, S_4 : \text{OFF}, \quad v_{Ao} = V_d/2 \tag{1.14}$$

$$v_{control} < v_{tri}, \quad S_3, S_4 : \text{ON} \quad \& \quad S_1, S_2 : \text{OFF}, \quad v_{Ao} = -V_d/2 \tag{1.15}$$

Thus, since the two switches are never off simultaneously, the output voltage V_A fluctuates between $V_d/2$ and $-V_d/2$ [17]. Another popular variation of the PWM technique as mentioned before is the unipolar switching scheme. The typical waveforms for this scheme are shown in Figure 1.52. They are generated from simulations [72].

The sine curve in Figure 1.52 is the control signal for switches S_1 and S_3 and has a phase angle of 0°. We name it $V_{control}$_1. The negative sine curve is the control signal for switches S_2 and S_4 and it is 180° phase-shifted from the first control signal. We name it $V_{control}$_2. As is clear from Figure 1.52, in the case of unipolar switching scheme for PWM, the output voltage is either switched from high to zero or from low to zero unlike in the bipolar switching scheme where the switching takes place directly between high and low [71]. As a result, the content of high-order harmonics in the output voltage is much lower compared to the corresponding one from the bipolar switching scheme. Consequently, the required output filter can be considerably smaller and the overall efficiency of the system is higher. Referring back to Figure 1.50, the full-bridge DC/AC inverter can have the following switch controls under unipolar PWM switching scheme:

© 2005 by CRC Press LLC

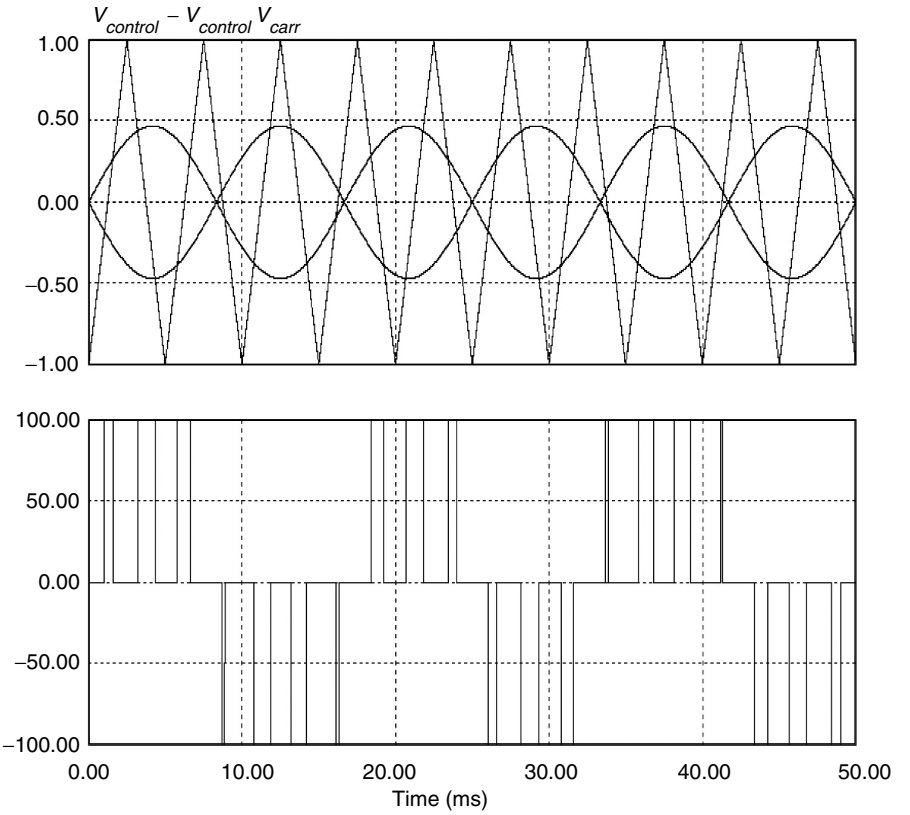

FIGURE 1.52
Unipolar PWM switching technique.

$$V_{control_}1 > V_{tri} \qquad S_1 \text{ is on; } S_4 \text{ is off} \tag{1.16}$$

$$V_{control_}1 < V_{tri} \qquad S_4 \text{ is on; } S_1 \text{ is off} \tag{1.17}$$

$$V_{control_}2 > V_{tri} \qquad S_3 \text{ is on; } S_2 \text{ is off} \tag{1.18}$$

$$V_{control_}2 < V_{tri} \qquad S_2 \text{ is on; } S_3 \text{ is off} \tag{1.19}$$

The switch pairs S_1/S_4 and S_2/S_3 are complementary to each other. When one of the switch pairs is on, the other switch pair must be off.

1.11 Battery Charger/Discharger

Batteries are among the most important components in the UPS systems. No matter how good the design of the power electronic circuits is, if batteries fail

© 2005 by CRC Press LLC

to operate properly, the whole UPS system fails to fulfill its purpose. In fact, batteries are the weakest component in the UPS systems. They are extremely sensitive to nonoptimal operating conditions such as high or low temperature, deep discharge, and overcharge.

While ambient temperature is not in the control of the UPS designer and very little can be done with regard to this, in the sense of temperature compensation, control of charging and discharging of batteries are of main concern in the UPS system design process.

There are two options for connecting batteries in the UPS systems. The first one is to connect them directly in parallel with the DC bus capacitors as shown in Figure 1.53.

This configuration results in a very simple system. The controlled rectifier itself serves as a charger for the batteries by maintaining an appropriate DC bus voltage. However, many battery cells need to be connected in series to maintain a high DC bus voltage. This requirement leads to several problems such as space, cost, reliability, and safety. Space limitations and cost considerations are critical design parameters in the low-power UPS applications such as personal computers. The safety problem with regard to maintaining high voltage at the battery terminals leads to a higher maintenance cost. High voltage requires a trained staff for monitoring and replacement of batteries while low voltage allows nontrained staff to do the same job. Reliability is also an issue in a high-voltage battery bank. For a certain storage capacitance, the reliability decreases as the number of battery cells connected in series increases.

Among the different solutions that have been proposed to overcome the high-voltage battery problems, the most popular one is to add a bidirectional DC/DC converter. It steps down the high DC bus voltage to the low battery voltage during the charging mode of operation and steps up the low battery voltage to the high DC bus voltage during the backup mode of operation. A typical bidirectional DC/DC converter employed in an on-line UPS system is shown in Figure 1.54. Figure 1.55 shows the bidirectional DC/DC converter itself.

The buck converter consists of switch S_2, diode D_1, and inductor L_{dc}. Switch S_2 chops the high voltage V_{dc} and steps it down to $V_{bat} = DV_{dc}$, where D is the duty ratio of switch S_2. The boost converter consists of switch S_1, diode D_2, and inductor L_{dc}. When S_1 is closed, inductor L_{dc} is energized. When S_1 is opened, the energy stored in L_{dc} is transferred to the output stepping up the low battery voltage V_{bat} to the high DC bus voltage $V_{dc} = V_{bat}/(1-D)$ where D is the duty ratio of switch S_1.

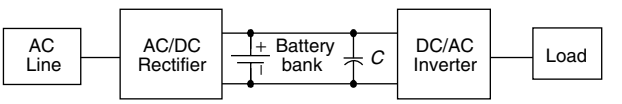

FIGURE 1.53
UPS system with a battery bank directly connected to the DC-link bus.

© 2005 by CRC Press LLC

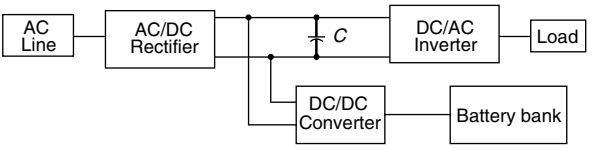

FIGURE 1.54
UPS system with a battery bank connected to the DC-link bus through a bidirectional DC/DC converter.

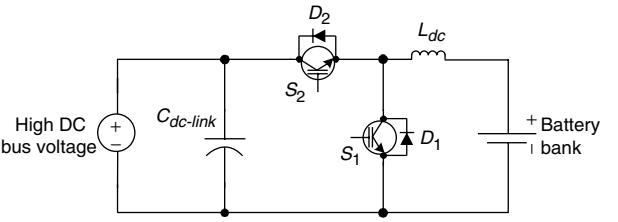

FIGURE 1.55
A bidirectional buck-boost DC/DC converter.

References

[1] Bekiarov, S.B. and Emadi, A., Uninterruptible power supplies: classification, operation, dynamics, and control, in *Proceedings of the 17th IEEE Applied Power Electronics Conference*, Dallas, TX, March 2002, pp. 597–604.

[2] Ho, W.J., Lio, J.B. and Feng, W.S., Economic UPS structure with phase-controlled battery charger and input-power-factor improvement, *IEE Proceedings of Electric Power Applications,* 144 (4), 221–226, 1997.

[3] Krishnan, R. and Srinivasan, S., Topologies for uninterruptible power supplies, in *Proceedings of the IEEE International Symposium on Industrial Electronics,* Hungary, June 1993, pp. 122–127.

[4] Lee, B.K., Fahimi, B. and Ehsani, M., Overview of reduced parts converter topologies for AC motor drives, in *Proceedings of the 32nd Power Electronics Specialists Conference,* 2001, pp. 2019–2024.

[5] Su, G.J., Design and analysis of a low cost, high performance single-phase UPS system, in *Proceedings of the 16th IEEE Applied Power Electronics Conference,* 2001, pp. 597–604.

[6] Su, G.J. and Ohno, T., A new topology for single-phase UPS systems, in *Power Conversion Conference,* Nagaoka, Japan, 1997, pp. 913–918.

[7] Park, H.W., Park, S.J., Park, J.G. and Kim, C., A novel high-performance voltage regulator for single-phase AC sources, *IEEE Transactions on Industrial Electronics*, 48 (3), 554–562, 2001.

[8] Divan, D.M., A new topology for single-phase UPS systems, in *Proceedings of the IEEE Industry Applications Society Annual Meeting,* Oct. 1989, pp. 931–936.

© 2005 by CRC Press LLC

[9] Ando, I., Takahashi, I., Tanaka, Y. and Ikchara, M., Development of a high efficiency UPS having active filter ability composed of a three arms bridge, in *Proceedings of 23rd International Industrial Electronics, Control and Instrumentation,* Nov. 1997, pp. 804–809.

[10] Uematsu, T., Ikeda, T., Hirao, N., Totsuka, S., Ninomiya, T. and Kawamoto, H., A study of the high performance single-phase UPS, in *Proceedings of 29th Power Electronics Specialists Conference,* May 1998, pp. 1872–1878.

[11] Ho, W.J., Lin, M.S. and Feng, W.S., Common-neutral-type AC/DC/AC topologies with PFC pre-regulator, in *Proceedings of the 29th Power Electronics and Drive Systems International Conference*, May 1997, pp. 53–58.

[12] Pinheiro, H., Blume, R. and Jain, P., Comparison of SV modulation methods for single-phase on-line three-leg UPS, in *Proceedings of the 26th Industrial Electronics Society Conference,* 2000, pp. 1328–1333.

[13] Jacobina, C.B., Correa, R.M.B., Ribeiro, R.L.A., Oliveira, T.M., da Silva, E.R.C. and Lima, A.M.N., AC/AC converters with a reduced number of switches, in *Proceedings of the 36th IEEE Industry Applications Society Annual Meeting*, Sept./Oct. 2001, pp. 1755–1762.

[14] Karve, S., Three of a kind, *IEE Review,* 46 (2), 27–31, 2000.

[15] Kamran, F. and Habetler, T.G., A novel on-line UPS with universal filtering capabilities, *IEEE Transactions on Power Electronics,* 13 (2), 366–371, 1998.

[16] Yamato, I., Tokunaga, N., Matsuda, Y., Amano, H. and Suzuki, Y., New conversion system for UPS using high frequency link, in *Proceedings of the 19th IEEE Power Electronics Specialists Conference,* Japan, April 1988, pp. 658–663.

[17] Rathmann, S. and Warner, H.A., New generation UPS technology, the delta conversion principle, in *Proceedings of the 31st IEEE Industry Applications Society Annual Meeting,* Oct. 1996, pp. 2389–2395.

[18] Joos, G., Lin, Y., Ziogas, P.D. and Lindsay, I.F., An online UPS with improved input-output characteristics, in *Proceedings of the 7th IEEE Applied Power Electronics Conference,* Feb. 1992, pp. 598–605.

[19] Martinez, S., Castro, M., Antoranz, R. and Aldana, F., Off-line uninterruptible power supply with zero transfer time using integrated magnetics, *IEEE Transactions on Industrial Electronics,* 36 (3), 629–635, 1989.

[20] Wu, J.C. and Jou, H.L., A new UPS scheme provides harmonic suppression and input power factor correction, *IEEE Transactions on Industrial Electronics,* 42 (6), 216–226, 1995.

[21] Windhorn, A., A hybrid static/rotary UPS system, *IEEE Transactions on Industry Applications,* 28 (3), 541–545, 1992.

[22] Hung, W.W. and McDowell, G.W.A., Hybrid UPS for standby power systems, *Power Engineering Journal,* 4 (6), 281–291, 1990.

[23] Chandorkar, M.C., Divan, D.M., Hu, Y. and Banerjee, B., Novel architecture and control for distributed UPS systems, in *Proceedings of the 9th IEEE Applied Power Electronics Conference*, Feb. 1994, pp. 683–689.

[24] Brody, S.L., Applications of batteries for UPS systems, in *Proceedings of the 6th IEEE Battery Conference on Applications and Advances,* Jan. 1991, pp. 75–85.

[25] Essig, B. and Braun, G., Selecting batteries for uninterruptible power supply systems, in *Proceedings of the 6th IEEE Applied Power Electronics Conference,* March 1991, pp. 642–646.

[26] Nelson, R.F. and Kepros, M.A., AC ripple effects on VRLA batteries in float applications, in *Proceedings of the 14th IEEE Battery Conference on Applications and Advances,* Jan. 1999, pp. 281–289.

© 2005 by CRC Press LLC

[27] Nelson, B., Charging strategies for VRLA batteries in standby applications, in *Proceedings of the 13th IEEE Battery Conference on Applications and Advances,* 1998, pp. 291–295.

[28] Waltari, P. and Suntio, T., Survey and evaluation of battery monitoring methods and results from user's viewpoint, in *Proceedings of the 21st IEEE International Telecommunication Energy Conference,* 1999.

[29] Lazarewicz, M.L., Hockney, R.L. and Jesi, J.S., Reliable power for telecommunications using flywheels, in *Proceedings of the 22nd International Telecommunications Energy Conference*, Sep. 2000, pp. 400–405.

[30] Lazarewicz, M.L., A description of the bacon power high energy and high power composite flywheel energy storage systems, http://www.beaconpower.com/.

[31] Hebner, R., Beno, J. and Walls, A., Flywheel batteries come around again, *IEEE Spectrum,* 39 (4), 46–51, 2002.

[32] Plater, B.B. and Andrews, J.A., Advances in flywheel energy-storage systems, http://www.powerpulse.net/powerpulse/.

[33] Darrelmann, H., Comparison of high power short time flywheel storage systems, in *Proceedings of the 21st International Telecommunication Energy Conference,* Copenhagen, Denmark, June 1999, pp. 6–9.

[34] Post, R.F., A new look at an old idea: the electromechanical battery, *Science and Technology Review,* April 1996, pp. 12–20.

[35] Hofmann, H. and Sanders, S.R., Synchronous reluctance motor/alternator for flywheel energy storage systems, in *Proceedings of the IEEE Power Electronics in Transportation,* Oct. 1996, pp. 199–206.

[36] Tokahashi, I., Itoh, Y. and Andoh, I., Development of a new uninterruptible power supply using flywheel energy storage techniques, in *Proceedings of the IEEE Industry Applications Society Annual Meeting*, Oct. 1989, pp. 711–716.

[37] Jeon, S.J. and Cho, G.H., A series–parallel compensated uninterruptible power supply with sinusoidal input current and sinusoidal output voltage, in *Proceedings of the 28th IEEE Power Electronics Specialists Conference,* June 1997, pp. 297–303.

[38] Da Silva, S.A.O., Donoso-Garcia, P.F. and Cortizo, P.C., A three-phase series–parallel compensated line-interactive UPS system with sinusoidal input current and sinusoidal output voltage, in *Proceedings of the 34th IEEE Industry Applications Conference,* Oct. 1999, pp. 826–832.

[39] Kwon, B.H., Choi, J.H. and Kim, T.W., Improved single-phase line-interactive UPS, *IEEE Transactions on Industrial Electronics,* 48 (4), 804–811, 2001.

[40] Sukumara, G.V., Parthasarathy, A. and Shankar, V.R., Fuel cell based uninterrupted power sources, in *Proceedings of the Power Electronics and Drive Systems International Conference,* May 1997, pp. 728–733.

[41] Nayar, C.V., Ashari, M. and Keerthipala, W.W.L., A grid-interactive photovoltaic uninterruptible power supply system using battery storage and a back up diesel generator, *IEEE Transactions on Energy Conversion,* 15 (3), 348–353, 2000.

[42] Leung, K.K. and Sutanto, D., Improving power system operations and control utilizing energy storage, in *Proceedings of the International Conference on Advances in Power System Control, Operation and Management,* Nov. 1997, pp. 626–631.

[43] Tsai, M.T., Lin, C.E., Tsai, W.I. and Huang, C.L., Design and implementation of a demand-side multifunction battery energy storage system, *IEEE Transactions on Industrial Electronics,* 42 (6), 642–652, 1995.

© 2005 by CRC Press LLC

[44] Fujita, H. and Akagi, H., The unified power quality conditioner: the integration of series- and shunt-active filters, *IEEE Transactions on Power Electronics,* 13 (2), 315–322, 1998.
[45] Gyugyi, L., Unified power-flow control concept for flexible AC transmission systems, *IEE Proceedings C,* 139 (4), 323–331, 1992.
[46] Holtz, J., Lotzkat, W., and Werner, K.H., A high-power multitransistor-inverter uninterruptible power supply system, *IEEE Transactions on Power Electronics,* 3 (3), 278–285, 1988.
[47] Johnson, B.K. and Lasseter, R., An industrial power distribution system featuring UPS properties, in *Proceedings of the 24th IEEE Power Electronics Specialists Conference,* June 1993, pp. 759–765.
[48] Chandorkar, M.C., Divan, D.M. and Adapa, R., Control of parallel connected inverters in standalone AC supply systems, *IEEE Transactions on Industry Applications,* 29 (1), 136–143, 1993.
[49] Holtz, J., Lotzkat, W. and Werner, K.H., Multi-inverter UPS system with redundant load sharing control, I*EEE Transactions on Industrial Electronics,* 37 (6), 506–513, 1990.
[50] Chen, J.F. and Chu, C.L., Combination voltage-controlled and current-controlled PWM inverters for UPS parallel operation, *IEEE Transactions on Power Electronics,* 10 (5), 547–558, 1995.
[51] Shanxu, D., Yu, M., Jian, X., Yong, K. and Jian, C., Parallel operation control technique of voltage source inverters in UPS, in *Proceedings of the IEEE 1999 International Conference on Power Electronics and Drive Systems,* July 1999.
[52] Nishida, Y., Miyashita, O., Haneyoshi, T., Tomita, H. and Maeda, A., A predictive instantaneous-current PWM controlled rectifier with AC-side harmonic current reduction, *IEEE Transactions on Industrial Electronics,* 44 (3), 337–343, 1997.
[53] Shimizu, T., Fujita, T., Kimura, G. and Hirose, J., A unity power factor PWM rectifier with DC ripple compensation, *IEEE Transactions on Industrial Electronics,* 44 (4), 447–455, 1997.
[54] Qiao, C. and Smedley, K.M., A topology survey of single-stage power factor corrector with a boost type input-current-shaper, in *Proceedings of the 15th IEEE Applied Power Electronics Conference,* Feb. 2000, pp. 460–467.
[55] Mao, H., Lee, C.Y., Boroyevich, D. and Hiti, S., Review of high-performance three-phase power-factor correction circuits, *IEEE Transactions on Industrial Electronics,* 44 (4), 437–446, 1997.
[56] Garcia, O., Cobos, J.A., Alou, P., Prieto, R., Uceda, J. and Ollero, S., A new family of single stage AC/DC power factor correction converters with fast output voltage regulation, in *Proceedings of the 28th IEEE Power Electronics Specialists Conference,* June 1997, pp. 536–542.
[57] Boost, M.A. and Ziogas, P.D., Towards a zero-output impedance UPS system, *IEEE Transactions on Industry Applications,* 25(3), 408–418, 1989.
[58] Abdel-Rahim, N.M. and Quaicoe, J.E., Analysis and design of a multiple feedback loop control strategy for single-phase voltage-source UPS inverters, *IEEE Transactions on Power Electronics,* 11 (4), 532–541, 1996.
[59] Kawamura, A., Chuarayapratip, R. and Haneyoshi, T., Deadbeat control of PWM inverter with modified pulse patterns for uninterruptible power supply, *IEEE Transactions on Industrial Electronics,* 35 (2), 295–300, 1988.
[60] Kawamura, A. and Ishihara, K., High frequency deadbeat control of three phase PWM inverter used for uninterruptible power supply, in *Proceedings of the 19th IEEE Power Electronics Specialists Conference,* April 1988, pp. 644–649.

© 2005 by CRC Press LLC

[61] Kukrer, O., Deadbeat control of a three-phase inverter with an output LC filter, *IEEE Transactions on Power Electronics,* 11 (1), 16–23, 1996.
[62] Divan, D.M., Inverter topologies and control techniques for sinusoidal output power supplies, in *Proceedings of the 6th IEEE Applied Power Electronics Conference,* March 1991, pp. 81–87.
[63] Kagotani, T., Kuroki, K., Shinohara, J. and Misaizu, A., A novel UPS using high-frequency switch-mode rectifier and high-frequency PWM inverter, in *Proceedings of the 20th IEEE Power Electronics Specialists,* June 1989, pp. 53–57.
[64] Habetler T.G. and Divan, D.M., Rectifier/inverter reactive component minimization, *IEEE Transactions on Industry Applications,* 25 (2), 307–316, 1989.
[65] Manning, C.D., Control of UPS inverters, in *IEE Colloquium on Uninterruptible Power Supplies*, 1994, pp. 3/1–3/5.
[66] Abdel-Rahim, N.M. and Quaicoe, J.E., Multiple feedback loop control strategy for single-phase voltage-source UPS inverter, in *Proceedings of the 25th IEEE Power Electronics Specialists Conference*, June 1994, pp. 958–964.
[67] Wu, H., Lin, D., Zhang, D., Yao, K. and Zhang, J., A current-mode control technique with instantaneous inductor-current feedback for UPS inverters, in *Proceedings of the 14th IEEE Applied Power Electronics Conference*, March 1999, pp. 951–957.
[68] Sae-Sue, S., Kinnares, V., Tangsiriworakul, C. and Potivejkul, S., Comparative performance evaluation of fixed and adaptive hysteresis band delta modulation techniques for UPS, in *Proceedings of the IEEE 1999 International Conference on Power Electronics and Drive Systems*, July 1999, pp. 956–960.
[69] Abdel-Rahim, N.M. and Quaicoe, J.E., A single-phase delta-modulated inverter for UPS applications, *IEEE Transactions on Industrial Electronics*, 40 (3), 347–354, 1993.
[70] Holtz, J., Pulse width modulation for electronic power conversion, *Proceedings of the IEEE*, 82 (8), 1194–1214, 1994.
[71] Mohan, N., Undeland, T.M. and Robbins, W.P., *Power Electronics: Converters, Applications, and Design*, 2nd ed., John Wiley & Sons, New York, 1995.
[72] Williamson, S.S., Power electronic converters for fuel cell applications, *M.S. Thesis,* Illinois Institute of Technology, July 2002.

© 2005 by CRC Press LLC